Town of Hilton Head Island
Regular Design Review Board Meeting

Tuesday, May 13, 2014
1:15 p.m. – Benjamin M. Racusin Council Chambers

REVISED AGENDA

As a Courtesy to Others Please Turn Off All Cell Phones and Pagers during the Meeting.

1. **Call to Order**
2. **Roll Call**
3. **Freedom of Information Act Compliance**
   Public notification of this meeting has been published, posted, and mailed in compliance with the Freedom of Information Act and the Town of Hilton Head Island requirements
4. **Approval of Agenda**
5. **Approval of Minutes** – Meeting of April 22, 2014
6. **Staff Report –** Submittal Deadlines & Completeness
7. **Board Business**
8. **Unfinished Business**
   A. Alteration/Addition
      1) DR 140004 – Shelter Cove Towne Centre – Building 121
      2) DR 140020 – Shelter Cove Towne Centre – Building 104
9. **Old Business**
   A. Alteration/Addition
      1) DR 130051 – South Beach Racquet Club
      2) DR 130012 – The Beach Club at Sea Pines Resort
10. **New Business**
    A. Alteration/Addition
       1) DR 140019 – Mediterranean Harbour Bar & Grill
       2) DR 140023 – Marley's Island Grill
    B. New Development - Conceptual
       1) DRB-000544-2014 – Lot 13 Capital Business Park

C. New Development – Final

1) DRB-000542-2014 – Palmetto Dunes Admin. & Security Offices

D. Signs

1) DRB-000543-2014 – Leamington Entrance Sign

11. Appearance by Citizens

12. Adjournment

Please note that a quorum of Town Council may result if four (4) or more of Town Council members attend this meeting.

Town of Hilton Head Island
Design Review Board **DRAFT**
Minutes of the Tuesday, April 22, 2014 Meeting
1:15p.m – Benjamin M. Racusin Council Chambers

Board Members Present:	Chairman Scott Sodemann, Vice Chairman Deborah Welch, Jake Gartner, Jennifer Moffett and Todd Theodore
Board Members Absent:	Tom Parker and Galen Smith
Town Council Present:	None
Town Staff Present:	Jennifer Ray, Urban Designer Teri Lewis, LMO Official Charles Cousins, Director of Community Development Shawn Colin, Deputy Director of Community Development Anne Cyran, Senior Planner Kathleen Carlin, Administrative Assistant

---

1. Call to Order
Chairman Scott Sodemann called the meeting to order at 1:15p.m.

2. Roll Call

3. Freedom of Information Act Compliance

4. Approval of the Agenda
Ms. Ray reported that two projects have been removed from the agenda because they did not receive their private ARB Notice of Action in time for today's meeting. The applications for Mediterranean Harbour Bar & Grill (DR140019) and Marley's Island Grill (DR140023) will need to be heard at a future meeting. The Board **approved** the agenda as revised by general consent.

5. Approval of the Minutes
The Board **approved** the minutes of the April 8, 2014 meeting as presented by general consent.

6. Staff Report
None

7. Board Business
None

8. Unfinished Business

A. Alteration/Addition

(Mr. Todd Theodore recused himself from review of the following application, Shelter Cove Towne Centre, Building 121- DR 140004, due to a professional conflict of interest. A Conflict of Interest Form was completed and signed by Mr. Theodore and attached to the record.)

1. **Shelter Cove Towne Centre, Building 121**- DR140004

Ms. Ray presented brief comments regarding the Board's previous review of this project. The applicant has submitted a revised site plan indicating the changes that are required due to building modifications. Of special note, the compass rose has been replaced by the pavers that are used throughout the rest of the project.

The applicant's revised site plan shows that the palms will be retained and their location slightly adjusted. The footprint for Building 131 has been adjusted to make room for pedestrian flow and the free standing building's "grab & go" service.

Ms. Ray stated that the staff received the applicant's updated building elevations just today. Because the staff has not had an opportunity to review and comment on the submission, the staff cannot make a recommendation today. Ms. Ray stated that the color palette has already been approved by the Board. Following this introduction, Chairman Sodemann requested that the applicant make his presentation.

Mr. David Narramore, Architect, and Mr. Mark Senn, Blanchard & Calhoun, presented statements in support of the application. Mr. Narramore presented comments regarding the new single roof; shed roof with exposed rafters, stainless steel handrail with mesh grid and Ipe top rail.

The applicant has changed the railing at the seating area to a brick planter that will go between the column bases. The porte cochere is emphasized by doubling up on the columns up front.

The free standing walk-up building is 14-ft. square. The small building has a brick base with tabby and shutters. The building has a three-sided chimney that conceals the exhaust system. Building 121 has a 3-ft. overhang. Following the applicant's presentation, the Board discussed the project.

The Board stated that the applicant is on the right track. The Board is in a tough position because they have not had an opportunity to review the revised plans before today's meeting. The Board provided general comments on the revised plans and stated that they will need to see the complete package one more time. The Board stated that the revised proportions are a big improvement. The Board stated that they like the upper railing and the addition of landscaping is a nice improvement. The Board stated that they like the re-design of the walk-up building. The columns on the building are now the proper dimension. The Board encouraged as much overhang on the building as possible. The Board and the applicant discussed the column detail showing the brick work and pedestal.

The Board stated that they look forward to receiving the complete package before the next meeting, including final details on the exterior trim and the planters, including plant material. No action was taken by the Board today.

9. Old Business

A. Alteration/Addition

1. **Bluewater Resort & Marina (Facilities Building)** – DR140018

Ms. Ray stated that this project received approval from the Board on April 8, 2014 with the condition that the applicant provides photos of the existing landscaping including the landscaping along Squire Pope Road. The applicant was also to provide a landscaping plan for the new plantings at the new building. The applicant has submitted several photos showing the existing conditions and a landscaping plan.

Ms. Ray presented an in-depth overhead review of the submission including photos of the existing landscaping. The landscape plan includes some evergreen trees and shrubs, oak trees and ground cover. All existing landscape will remain. The staff recommends approval of the application as submitted. Following the staff's presentation, Chairman Sodemann requested that the applicant make his presentation.

Mr. Charlie Haltermann, Bluewater Resort Construction Manager, presented statements in support of the application. The Board stated that they appreciate the applicant's photos and landscaping plan. Following final comments by the Board, Chairman Sodemann requested that a motion be made.

Vice Chairman Welch made a **motion** to **approve** the Bluewater Resort & Marina (Facilities Building) application, DR140018, as submitted. Mr. Gartner **seconded** the motion and the motion **passed** with a vote of 5-0-0.

10. New Business

A. Alteration/Addition

(Mr. Todd Theodore recused himself from review of the following application, Shelter Cove Towne Centre Building 104, DR 140020, due to a professional conflict of interest. A Conflict of Interest Form was completed and signed by Mr. Theodore and attached to the record.)

1. **Shelter Cove Towne Centre Building 104** - DR 140020

Ms. Ray introduced the project and stated its location in the Shelter Cove Towne Centre. Ms. Ray presented an in-depth overhead review of the application including the elevations.

Ms. Ray stated that the building was designed and approved as part of overall development to be a mate to one of the other "front" buildings. However, the applicant is proposing a new design. The floor plan has changed slightly to add doors on the end and sides versus the middle as the building is planned now for two tenants. Ms. Ray reviewed the original and revised site plans.

Building 104 has been designed with a flat roof/parapet system in order to provide a sense of "variety" within the Shelter Cove Towne Center. The exterior wall finishes, trim and canopies replicate similar design elements and colors as used on other buildings within the overall development.

The wall finishes of 'board & batten' and 'machine-cut shingles' are reminiscent of structures as can be seen throughout the South Carolina low-country. The walls are capped with a substantial cornice band reflecting a classic design motif which is also a common design element in the area.

Ms. Ray reviewed the color palette. Although used in a different design context, the applicant states that the elements and colors provide a sense of continuity between the various building designs of the project. Shadow lines created by varying materials, building setbacks, canopy overhangs and storefront variations provide visual stimulus for the overall building.

Ms. Ray reviewed the elevations. The staff recommends that the applicant reconsider the metal awning as it is too bright and shiny. The staff recommends that they be toned down a bit. Ms. Ray distributed the color board for the Board's review. All of the colors are on the approved color list. The Shelter Cove ARB has approved the building. The staff recommends approval of the project with conditions.

DRAFT

Ms. Ray stated that flat roofs are generally discouraged per the Design Guide. The staff would like to see cut sheets for the lighting. The staff would also like to see an updated site plan and landscaping plan. Following the staff's presentation, Chairman Sodemann requested that the applicant make his presentation.

Mr. David Narramore, Architect, and Mr. Mark Senn, Blanchard & Calhoun, presented statements in support of the application. The applicants discussed the contemporary design of Building 104. The applicants stated that they believe the design of Building 104 reflects the 'island vernacular' within a contemporary concept while preserving a traditional ambiance. Following the applicant's presentation, the Board discussed the project.

Board members stated that they like the overall design of the building. The roof pitch and the aluminum canopies are of concern to Board members (as they conflict with the Design Guide). Chairman Sodemann stated his concern with the building's totally flat roof. Some sloping roof elements are needed for at least part of the building. The Board stated their agreement with the staff's recommendation to tone down the color of the metal canopy a little. The other colors are subdued and are acceptable. The Board stated that they like the materials.

The Board discussed the proposed lighting plan. The Board stated that they would like to see cut sheets for light fixtures. The Board would also like to see an updated landscaping plan. The Board stated that the location of signage will be very important to the project.

Following final comments by the Board, Chairman Sodemann stated that no action will be taken by the Board at this time. The Board looks forward to seeing final details for this project at a future meeting.

2. **<u>The Green Thumb</u>** - DR140022

Ms. Ray introduced the application and stated its location, 35 Dillon Road. The applicant is proposing to erect a 30' x 60' shade structure on part of the existing paved area.

Ms. Ray presented an in-depth overhead review of the application including photos of existing site conditions including a black chain link fence. The shade structure consists of 1" galvanized pipe with a black nylon fabric that is attached to the pipe structure. Its purpose is to shade plant material that would otherwise perish in direct sun.

The site plan shows the proposed location of the shade structure on asphalt pad adjacent to the existing building, behind a chain link fence. The staff recommended approval of the application as submitted. At completion of the staff's presentation, Chairman Sodemann requested that the applicant make his presentation.

Mr. William Lynch, Hilton Head Landscapes & Hardscapes, presented statements in support of the application. Following the applicant's presentation, the Board discussed the application.

The Board discussed the project and stated some concern with the aesthetics of the project. Perhaps the applicant could consider a pergola, shade sails, or wood posts with long beams for an improved appearance. The applicant presented statements regarding their Bluffton location using the same black shade structure. The applicant stated that the appearance of the project is important to their business. The applicant stated that they would like to add a greenhouse to the site at some time in the future. The Board and the applicant discussed the location of the shade structure as well as the location of the black chain link fence. The Board and the applicant also discussed paining the posts and brackets black to match the fence. At the completion of the Board's discussion, Chairman Sodemann requested that a motion be made.

Mr. Theodore made a **motion** to **approve** The Green Thumb, application, DR140022, with the condition that the applicant shall paint the posts and brackets black to match the chain link fence. Ms. Moffett **seconded** the motion and the motion **passed** with a vote of 5-0-0.

B. New Development – Conceptual

1. **Palmetto Dunes Administration & Security Offices** – DR140021

Ms. Ray stated that this is the second Conceptual review for this project. Ms. Ray presented an in-depth overhead review of the project including the site plan, elevations and photos of existing conditions.

The project will be a demolition of the existing Fire Station # 6 located on Queens Folly Road and construction of a new 7,500 square foot Palmetto Dunes Administration and Security Office building. Palmetto Dunes ARB has approved the Conceptual submission. The staff recommended that the application be approved as submitted.

Following staff's presentation, Chairman Sodemann requested that the applicant make his presentation.

Mr. James Atkins, Court Atkins Architects, presented statements in support of the application. Mr. Atkins presented brief comments regarding the history of the project. Mr. Atkins discussed the intent of the project, the proposed colors including the shade of blue accent color for the shutters, and the landscaping plan. Following the applicant's presentation, the Board discussed the Conceptual application.

The Board stated that they like the Conceptual submission. The Board discussed the color palette and the landscaping plan with the applicant. The Board also discussed the location of the trellis feature, the proposed shade of blue, detail of the shake shingles, and the addition of copper on the 2/12 roofs. Following final comments by the Board, Chairman Sodemann requested that a motion be made.

Mr. Gartner made a **motion** to **approve** the Palmetto Dunes Administration & Security Offices application, DR140021, with the following conditions: (1) the applicant should rethink the Polo Blue color for the shutters; (2) the applicant should consider a different roof finish on the 2/12 pitch on the corners; (3) the applicant should coordinate the landscaping with the corner of the building, specifically the trellis side north elevation. Vice Chairman Welch **seconded** the motion and the motion **passed** with a vote of 5-0-0.

11. Appearance by Citizens
None

12. Adjournment
The meeting was adjourned at 3:00p.m.

Submitted By:	Approved By:
_____	_____
Kathleen Carlin	Scott Sodemann
Administrative Assistant	Chairman

DRAFT

Town of Hilton Head Island

Community Development Department
One Town Center Court
Hilton Head Island, SC 29928
Phone: 843-341-4757 Fax: 843-842-8908
www.hiltonheadislandsc.gov

FOR OFFICIAL USE ONLY
Date Received: _____
Accepted by: _____
App. #: DR_____
Meeting Date: _____

Applicant/Agent Name: Shelter Cove Towne Centre Company: Shelter Cove Towne Center LLC
Mailing Address: 40 Shelter Cove Lane City: HH State: SC Zip: 29928
Telephone: 686-2099 Fax: 686-5581 E-mail: cullinthom@sheltercovetownecenter.com
Project Name: Shelter Cove Towne Centre - Bldg 121 Project Address: 24 Shelter Cove Lane Hilton Head Island, SC 29928
Parcel Number [PIN]: R520 012 00B 0026 0000
Zoning District: _____ Overlay District(s): _____

DESIGN REVIEW BOARD (DR) SUBMITTAL REQUIREMENTS

Digital Submissions may be accepted via e-mail by calling 843-341-4757.

Project Category:

_____ New Development – Conceptual
_____ New Development – Final, indicate Project Number
X (To previously approved Development) Alteration/Addition
_____ Minor External Change

Submittal Requirements for ***All*** projects:

_____ Private Architectural Review Board (ARB) Notice of Action (if applicable): When a project is within the jurisdiction of an ARB, the applicant shall submit such ARB's written notice of action per LMO Section 16-3-1004. Submitting an application to the ARB to meet this requirement is the responsibility of the applicant.

_____ Filing Fee, New Development $175, Alterations/Additions $100, Minor External $50 cash or check made payable to the Town of Hilton Head Island.

Additional Submittal Requirements:

New Development – Conceptual Approval

_____ A survey (1"=30' minimum scale) of property lines, existing topography and the location of trees meeting the tree protection regulations of Sec. 16-3-405, and if applicable, location of bordering streets, marshes and beaches.

_____ A site analysis study to include specimen trees, access, significant topography, wetlands, buffers, setbacks, views, orientation and other site features that may influence design.

_____ A draft written narrative describing the design intent of the project, its goals and objectives and how it reflects the site analysis results.

_____ Context photographs of neighboring uses and architectural styles.

_____ Conceptual site plan (to scale) showing proposed location of new structures, parking areas and landscaping.

_____ Conceptual sketches of primary exterior elevations showing architectural character of the proposed development, materials, colors, shadow lines and landscaping.

Additional Submittal Requirements:

New Development – Final Approval

_____ A final written narrative describing how the project conforms with the conceptual approval and design review guidelines of Sec. 16-4-503.

_____ Final site development plan meeting the requirements of Sec. 16-3-303.F.

_____ Final site lighting and landscaping plans meeting the requirements of Sec. 16-3-304 and Sec. 16-3-305.

_____ Final floor plans and elevation drawings (1/8"=1'-0" minimum scale) showing exterior building materials and colors with architectural sections and details to adequately describe the project.

_____ A color board (11"x17" maximum) containing actual color samples of all exterior finishes, keyed to the elevations, and indicating the manufacturer's name and color designation.

_____ Any additional information requested by the Design Review Board at the time of concept approval, such as scale model or color renderings, that the Board finds necessary in order to act on a final application.

Additional Submittal Requirements:

Alterations/Additions *and* Minor External Changes

_____ A written narrative describing how project conforms to design guidelines of Section 16-4-503.

_____ Photographs and/or drawings of existing development.

_____ Drawings of the proposed development – 11"x 17".

_X_ Material/color samples of existing and proposed changes - 8 ½"X 14" *Maximum*; Stating manufacturer and material name

Note: All application items must be received by the deadline date in order to be reviewed by the DRB per LMO Section 16-3-106.

A representative for each agenda item is strongly encouraged to attend the meeting.

Are there recorded private covenants and/or restrictions that are contrary to, conflict with, or prohibit the proposed request? If yes. a copy of the private covenants and/or restrictions must be submitted with this application. YES X NO will submit SCHCARB approval later.

To the best of my knowledge, the information on this application and all additional documentation is true, factual, and complete. I hereby agree to abide by all conditions of any approvals granted by the Town of Hilton Head Island. I understand that such conditions shall apply to the subject property only and are a right or obligation transferable by sale.

I further understand that in the event of a State of Emergency due to a Disaster, the review and approval times set forth in the Land Management Ordinance may be suspended.

SIGNATURE _____ DATE 1-28-14

20' SETBACK/BUFFER
TENANT 101
6,697 SF
TENANT 121
5,143 SF
COLD STORAGE
TENANT 122
1,155 SF
TENANT 123
1,644 SF

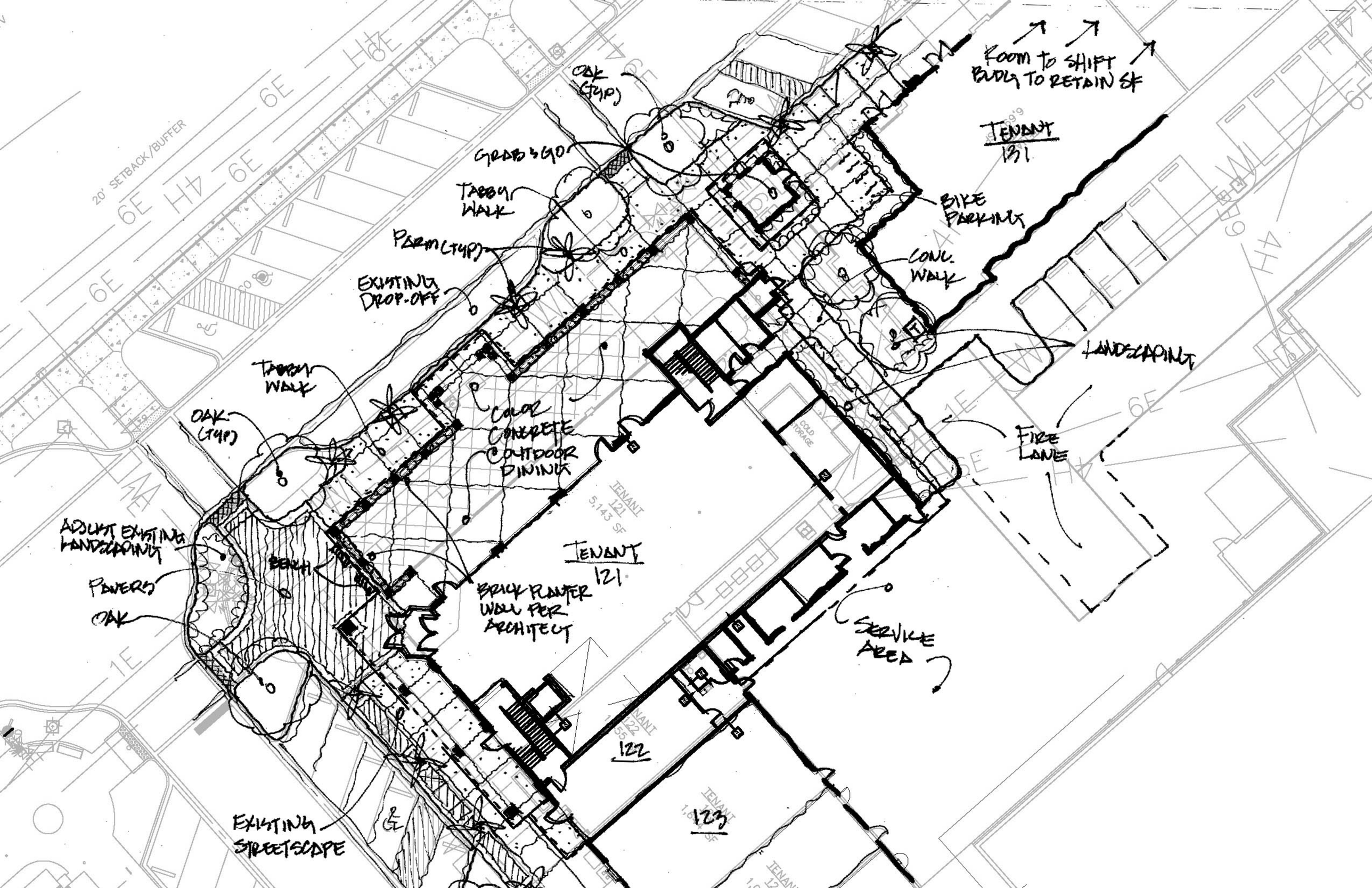
ROOM TO SHIFT BUILDING TO RETAIN SF
TENANT 131
OAK (TYP)
GRAB & GO
TABBY WALK
PALM (TYP)
EXISTING DROP-OFF
BIKE PARKING
CONC. WALK
LANDSCAPING
TABBY WALK
OAK (TYP)
COLOR CONCRETE OUTDOOR DINING
FIRE LANE
ADJUST EXISTING LANDSCAPING
BENCH
PAVERS
OAK
TENANT 121
BRICK PLANTER WALL PER ARCHITECT
SERVICE AREA
122
123
EXISTING STREETSCAPE
20' SETBACK/BUFFER
COLD STORAGE

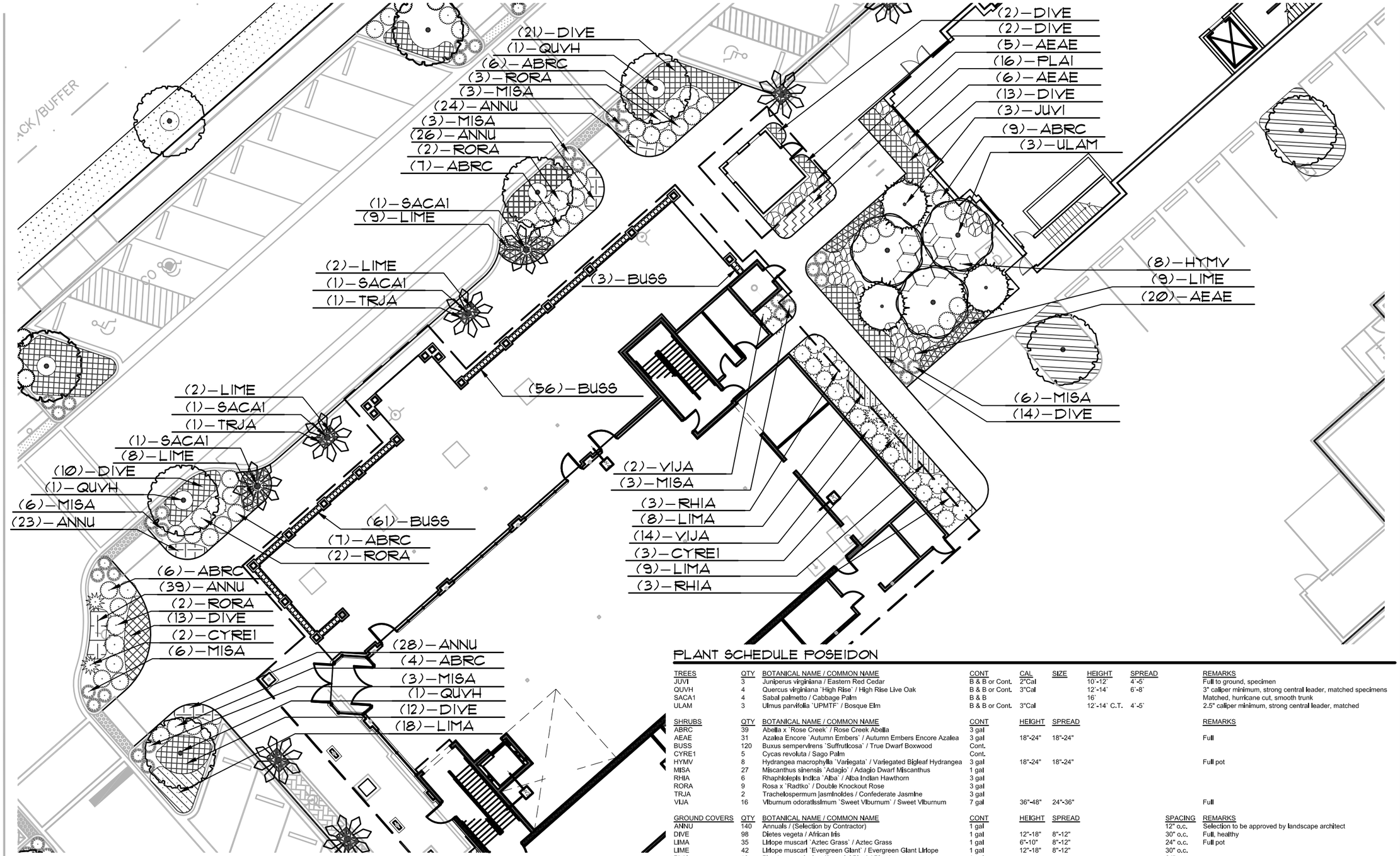

PLANT SCHEDULE POSEIDON

TREES	QTY	BOTANICAL NAME / COMMON NAME	CONT	CAL	SIZE	HEIGHT	SPREAD	REMARKS
JUVI	3	Juniperus virginiana / Eastern Red Cedar	B & B or Cont.	2"Cal		10'-12'	4'-5'	Full to ground, specimen
QUVH	4	Quercus virginiana `High Rise` / High Rise Live Oak	B & B or Cont.	3"Cal		12'-14'	6'-8'	3" caliper minimum, strong central leader, matched specimens
SACA1	4	Sabal palmetto / Cabbage Palm	B & B			16'		Matched, hurricane cut, smooth trunk
ULAM	3	Ulmus parvifolia `UPMTF` / Bosque Elm	B & B or Cont.	3"Cal		12'-14' C.T.	4'-5'	2.5" caliper minimum, strong central leader, matched

SHRUBS	QTY	BOTANICAL NAME / COMMON NAME	CONT	HEIGHT	SPREAD	REMARKS
ABRC	39	Abelia x `Rose Creek` / Rose Creek Abelia	3 gal			
AEAE	31	Azalea Encore `Autumn Embers` / Autumn Embers Encore Azalea	3 gal	18"-24"	18"-24"	Full
BUSS	120	Buxus sempervirens `Suffruticosa` / True Dwarf Boxwood	Cont.			
CYRE1	5	Cycas revoluta / Sago Palm	Cont.			
HYMV	8	Hydrangea macrophylla `Variegata` / Variegated Bigleaf Hydrangea	3 gal	18"-24"	18"-24"	Full pot
MISA	27	Miscanthus sinensis `Adagio` / Adagio Dwarf Miscanthus	1 gal			
RHIA	6	Rhaphiolepis indica `Alba` / Alba Indian Hawthorn	3 gal			
RORA	9	Rosa x `Radtko` / Double Knockout Rose	3 gal			
TRJA	2	Trachelospermum jasminoides / Confederate Jasmine	3 gal			
VIJA	16	Viburnum odoratissimum `Sweet Viburnum` / Sweet Viburnum	7 gal	36"-48"	24"-36"	Full

GROUND COVERS	QTY	BOTANICAL NAME / COMMON NAME	CONT	HEIGHT	SPREAD	SPACING	REMARKS
ANNU	140	Annuals / (Selection by Contractor)	1 gal			12" o.c.	Selection to be approved by landscape architect
DIVE	98	Dietes vegeta / African Iris	1 gal	12"-18"	8"-12"	30" o.c.	Full, healthy
LIMA	35	Liriope muscari `Aztec Grass` / Aztec Grass	1 gal	6"-10"	8"-12"	24" o.c.	Full pot
LIME	42	Liriope muscari `Evergreen Giant` / Evergreen Giant Liriope	1 gal	12"-18"	8"-12"	30" o.c.	
PLAI	16	Plumbago auriculata `Imperial Blue` / Plumbago	1 gal			24" o.c.	

0 10' 20' 40' 60' 80'

SCALE: 1"=20'

NORTH

PLAN IS SUBJECT TO CHANGE.

Wood+Partners Inc. WPi
Landscape Architects
Land Planners
PO Box 23949 ■ Hilton Head Island, SC 29925
843.681.6618 ■ Fax 843.681.7086 ■ www.woodandpartners.com

BLANCHARD & CALHOUN COMMERCIAL
Atlanta, Georgia

MATERIAL PAVING STUDY

SHELTER COVE MALL REDEVELOPMENT

Hilton Head Island, SC

DRAWN BY:

CHECKED BY:

This drawing is an instrument of service & remains the property of Wood+Partners Inc. It may not be copied or reproduced in any manner without written permission.

#	REVISION	DATE	BY

DATE
04/29/14

PROJECT NUMBER
01-12001

SHEET TITLE
POSEIDON PLANTING PLAN

SHEET NUMBER

1 of 1

EXTERIOR FINISH SCHEDULE

BRICK SCHEME:
BRICK - " STEEPLECHASE" BY BORAL

MORTAR SCHEME:
ALL MORTAR SHALL BE "DESERT BUFF"
BY HOLCIM OR EQUAL

STUCCO:
TABBY STUCCO - "IVORY BUFF"

SIDING:
SW #7042 "SHOJI WHITE"

TRIM
SW #6199 "RARE GRAY"

FASCIA, COLUMNS, AND GUTTERS/DOWNSPOUTS
SW #7075 "WEB GRAY"

METAL ROOFING AND COPING:
STANDING SEAM METAL ROOFING - "TEAL"
BY PAC-CLAD

STOREFRONT SYSTEM:
ALL GLASS SHALL BE 1" LOW-E
INSULATED GLASS W/ CLEAR ANODIZED
ALUMINUM FRAMES

NOTE:
ALL ELECTRICAL EQUIPMENT, AND DOORS ARE TO BE
PAINTED TO MATCH ADJACENT WALLS.

BUILDING 121 - NORTH ELEVATION

BUILDING 121 - WEST ELEVATION

Blanchard & Calhoun COMMERCIAL

SHELTER COVE TOWNE CENTRE

HILTON HEAD ISLAND, SC

NARRAMORE ASSOCIATES, INC.
Architects & Planners
AMERICAN INSTITUTE OF ARCHITECTS
P.O. Box 8438, Greenville, SC 29604
310 Mills Ave, Suite 203, Greenville, SC 29605
Phone: 864.242.9881
Fax: 864.232.5202
email: plans@narramore.net

POSEIDON - BLDG. 121 & 122

38 SHELTER COVE LANE
HWY. 278, MILE MARKER 8
HILTON HEAD, SC 29928

DEVELOPED BY

BLANCHARD & CALHOUN COMMERCIAL

2743 PERIMETER PARKWAY
BUILDING 100, SUITE 370
AUGUSTA, GA 30909

ARCHITECT'S JOB NUMBER: 13914

ISSUE DATE:
01/10/2014

OWNER:

BLANCHARD + CALHOUN
2743 PERIMETER PARKWAY
BUILDING 100, SUITE 370
AUGUSTA, GA 30909

ARCHITECT:

NARRAMORE ASSOCIATES, INC.
DESIGNER OF RECORD: DAVID L. NARRAMORE, AIA
310 MILLS AVE., STE. 203
GREENVILLE, SC 29605
864.242.9881

CIVIL ENGINEER:

WARD EDWARDS ENGINEERING
P.O. BOX 381
BLUFFTON, SC 29910
843-837-5250

STRUCTURAL ENGINEER:

BRITT PETERS + ASSOCIATES
DESIGNER OF RECORD: STEVEN DOVER
101 W. CAMPERDOWN WAY SUITE 601
GREENVILLE, SC 29601
864-271-8869

MECHANICAL ENGINEER:

LeBLANC-WELCH
DESIGNER OF RECORD: DAVID C. BONDS
25 WOODS LAKE RD., STE. 405
GREENVILLE, SC 29607
864-271-6535

ELECTRICAL ENGINEER:

ROGER S. PASSMORE, P.E.
719 LAURENS RD., STE. 100
GREENVILLE, SC 29607
864-235-3374

PROJECT DATA

GENERAL

OCCUPANCY CLASSIFICATION - ASSEMBLY A-2
MERCANTILE GROUP M
CONSTRUCTION TYPE - IIB - SPRINKLED - UNPROTECTED

BUILDING CODE REFERENCES

THIS PROJECT WAS DESIGNED TO CONFORM TO THE FOLLOWING APPLICABLE CODES FOR THE LOCALITY.

INTERNATIONAL BUILDING CODE (2012)
INTERNATIONAL FIRE CODE (2012)
INTERNATIONAL PLUMBING CODE (2012)
INTERNATIONAL MECHANICAL CODE (2012)
INTERNATIONAL ENERGY CONSERVATION CODE (2009)
NATIONAL ELECTRICAL CODE (2011)

STRUCTURAL DESIGN CRITERIA

SEISMIC USE GROUP II SEISMIC DESIGN CATEGORY C

FLOOR: 100 PSF ROOF: 20 PSF

BUILDING AREA LIMITATIONS

	ASSEMBLY A-2	MERCANTILE - M	
ALLOWABLE AREA (TABLE 503) (see note below modification formulas)	= 12,500 S.F.	= 9,500 S.F.	
+AREA INCREASE IBC 506.2 (____ x 75%)	= 9,375 S.F.	= 7,125 S.F.	
TOTAL ALLOWABLE AREA W/ AREA INCREASE	= 21,875 S.F.	= 16,625 S.F.	TOTAL=
TOTAL AREA PROVIDED	10,749 S.F. - O.K.	960 S.F. - O.K.	11,709 S.F. - O.K.

BUILDING HEIGHT LIMITATIONS

ALLOWABLE BUILDING HEIGHT (TABLE 503)	= 55'
ALLOWABLE NUMBER OF STORIES (TABLE 503)	= 3 STORIES
ACTUAL BUILDING HEIGHT (HIGHEST PARAPET)	= ±48'-6 1/2"
ACTUAL NUMBER OF STORIES	= 2 STORY

EGRESS REQUIREMENTS

	ASSEMBLY A-2	MERCANTILE - M	
OCCUPANT LOAD = 30 S.F. PER OCCUPANT LOAD		(960 SF. GROSS) = 32	
OCCUPANT LOAD = 15 S.F. PER OCCUPANT LOAD	(10,749 SF. GROSS) = 717		TOTAL = 749 OCCUPANTS
(SEE TENANT UPFIT PLANS FOR EXACT SEAT COUNT)			

SHEET INDEX

SHEET	DESCRIPTION
INDEX	INDEX & COVER
S0.0	GENERAL NOTES
S1.0	FOUNDATION PLAN
S1.1	SECOND FLOOR FRAMING PLAN
S1.2	ROOF FRAMING PLAN
S2.0	SPECIAL INSPECTIONS
S3.0	TYPICAL DETAILS
S3.1	TYPICAL DETAILS
S3.2	TYPICAL DETAILS
S4.0	SECTIONS
S4.1	SECTIONS
A1.0	FIRST FLOOR PLAN
A1.1	SECOND FLOOR PLAN
A1.2	ROOF PLAN
A1.3	ROOF DETAILS
A1.4	DOOR SCHEDULE
A1.5	STOREFRONT DETAILS
A1.6	PLAN DETAILS
A1.7	PLAN DETAILS
A2.0	EXTERIOR ELEVATION
A2.1	EXTERIOR ELEVATION
A3.0	BUILDING SECTIONS
A3.1	WALL SECTIONS
A3.2	WALL SECTIONS
A3.3	WALL SECTIONS
A3.4	WALL SECTIONS
A6.0	UNIT PLAN - BUILDING 122
P1.0	PLUMBING PLANS
M1.0	HVAC PLAN / DETAILS
E1.0	ELECTRICAL PLAN

NARRAMORE ASSOCIATES, INC.
Architects & Planners
AMERICAN INSTITUTE OF ARCHITECTS

P.O. Box 8438, Greenville, SC 29604
310 Mills Ave, Suite 203, Greenville, SC 29605
Phone: 864.242.9881
Fax: 864.232.5202
email: plans@narramore-architects.com

NARRAMORE ASSOCIATES, INC.
Architects & Planners
AMERICAN INSTITUTE OF ARCHITECTS

P.O. Box 8438 Greenville, SC 29604
310 Mills Ave. Greenville, SC 29605

Phone: 864.242.9881
Fax: 864.232.5202
plans@narramore-architects.com

©2014, NARRAMORE ASSOCIATES, INC.
COPYRIGHT PROTECTED BY FEDERAL LAW

SEAL

Blanchard & Calhoun COMMERCIAL
2743 PERIMETER PKWY
BLDG 100 STE 370
AUGUSTA, GA 30909

POSEIDON - BLDG. 121 & 122
38 SHELTER COVE LANE
HWY. 278, MILE MARKER 8
HILTON HEAD ISLAND, SC 29928

REVISIONS
1 02-06-14
2 02-14-14
3 02-25-14
4 03-10-14
5 03-27-14
6 04-14-14

DOCUMENT DATA
BUILDING 121
PROJECT NUMBER
13914
ISSUE DATE
01-10-14

SHELTER COVE
BLDG 121

INDEX

INDEX
& COVER

GENERAL NOTES

I. GENERAL

A. STRUCTURAL DRAWINGS SHALL BE USED IN CONJUNCTION WITH THE ARCHITECTURAL, MECHANICAL, ELECTRICAL, SHOP DRAWINGS AND SPECIFICATIONS.
B. IT IS THE GENERAL CONTRACTOR'S RESPONSIBILITY TO OBTAIN ALL CONTRACT DOCUMENTS AND LATEST ADDENDA AND TO SUBMIT TO ALL SUBCONTRACTORS AND SUPPLIERS PRIOR TO THE SUBMITTAL OF SHOP DRAWINGS.
C. THE GENERAL CONTRACTOR SHALL COMPARE ALL CONTRACT DRAWINGS AND REPORT ANY DISCREPANCY BETWEEN DISCIPLINES AND WITHIN A GIVEN DISCIPLINE TO THE ARCHITECT AND ENGINEER PRIOR TO FABRICATION AND ERECTION.
D. IF A CONFLICT EXISTS AMONG THE STRUCTURAL DRAWINGS, GENERAL NOTES, OR THE SPECIFICATIONS, THE STRICTEST REQUIREMENTS, AS INDICATED BY THE ENGINEER, SHALL GOVERN.
E. THE CONTRACTOR SHALL COORDINATE ALL ELEVATIONS AND DIMENSIONS, INCLUDING BUT NOT LIMITED TO THOSE FOR OPENINGS IN WALLS AND IN ROOF AND FLOOR SYSTEMS, WITH THE ARCHITECTURAL, PLUMBING, ELECTRICAL, AND MECHANICAL PLANS.
F. ALL DIMENSIONS, ELEVATIONS, AND ANY OTHER CONDITIONS OF ANY EXISTING STRUCTURES OR OTHER FEATURES SHALL BE VERIFIED BY THE GENERAL CONTRACTOR AND ANY DISCREPANCIES WITH THE CONTRACT DRAWINGS REPORTED TO THE ARCHITECT AND ENGINEER BEFORE PROCEEDING WITH THE AFFECTED PART OF THE WORK. DURING THE CONSTRUCTION PROCESS, IT SHALL BE SOLELY THE CONTRACTOR'S RESPONSIBILITY TO MAINTAIN THE INTEGRITY OF THE EXISTING STRUCTURE AND TO PROTECT FROM DAMAGE ANY PORTIONS THAT ARE TO REMAIN.
G. THE COMPLETED LATERAL-FORCE RESISTING SYSTEMS AND DIAPHRAGMS ARE REQUIRED FOR THE STRUCTURE TO RESIST LATERAL LOADS AND PROVIDE STABILITY UNDER GRAVITY LOADS. DURING THE CONSTRUCTION PROCESS, THE CONTRACTOR SHALL PROVIDE ALL REQUIRED BRACING DURING CONSTRUCTION TO MAINTAIN THE STABILITY AND SAFETY OF ALL STRUCTURAL ELEMENTS UNTIL THE LATERAL-LOAD RESISTING OR STABILITY-PROVIDING SYSTEM IS COMPLETELY INSTALLED AND THE STRUCTURE IS COMPLETELY TIED TOGETHER.
H. UNLESS OTHERWISE NOTED, DETAILS SHOWN ON ANY DRAWING ARE TO BE CONSIDERED TYPICAL FOR ALL SIMILAR CONDITIONS.
I. THE CONTRACTOR SHALL BE SOLELY RESPONSIBLE FOR ALL CONSTRUCTION MEANS AND METHODS AND FOR SAFETY PRECAUTIONS AND PROGRAMS.
J. BRITT, PETERS & ASSOCIATES, INC. SHALL NOT BE RESPONSIBLE FOR THE ACTS OR OMISSION OF THE CONTRACTOR OR FOR THEIR FAILURE TO CARRY OUT THE WORK IN ACCORDANCE WITH THE CONTRACT DOCUMENTS.
K. PERIODIC SITE OBSERVATION BY BRITT, PETERS & ASSOCIATES, INC. IS SOLELY FOR THE PURPOSE OF DETERMINING IF THE WORK OF THE CONTRACTOR IS PROCEEDING IN ACCORDANCE WITH THE STRUCTURAL CONTRACT DOCUMENTS AND IS NOT EXHAUSTIVE OR CONTINUOUS TO CHECK THE QUALITY OR QUANTITY OF THE WORK.
L. THE BUILDING OWNER SHALL PROVIDE PERIODIC MAINTENANCE TO INSURE STRUCTURAL INTEGRITY. SUCH MAINTENANCE SHALL INCLUDE BUT NOT LIMITED TO PAINTING OF STEEL, PROTECTIVE COATING FOR CONCRETE, SEALANTS, CAULKED JOINTS, EXPANSION JOINTS, CONTROL JOINTS, SPALLS AND CRACKS IN CONCRETE, AND PRESSURE WASHING OF EXPOSED STRUCTURAL ELEMENTS.

II. DESIGN CRITERIA

A. THE CONTRACT DOCUMENTS ARE BASED ON THE REQUIREMENTS OF THE INTERNATIONAL BUILDING CODE, 2012 EDITION.
B. DEAD LOADS
 1. TYPICAL FLOOR SYSTEMS:
  a. CONCRETE ON METAL DECK 57 PSF
  b. MEP*: 10 PSF
  c. FINISHES 10 PSF
 2. TYPICAL ROOF SYSTEMS: (20 PSF TOTAL)
  a. MEP*: 10 PSF
  b. INSULATION & ROOFING: 10 PSF

* MISCELLANEOUS CEILING AND HANGING MECHANICAL LOADS SUCH AS DUCT WORK AND SPRINKLER PIPES.

C. LIVE LOADS
 1. LIVE LOADS ARE BASED ON THE MORE RESTRICTIVE OF THE UNIFORM LOAD LISTED BELOW OR THE CONCENTRATED LOAD LISTED ACTING OVER A 6.25 SQUARE FOOT AREA EXCEPT FOR PARKING GARAGES WHICH ACT OVER AN AREA OF 20 SQUARE INCHES. LIVE LOADS HAVE BEEN REDUCED AS PRESCRIBED IN THE AFOREMENTIONED BUILDING CODE.

CATEGORY	UNIFORM LOAD (PSF)	CONCENTRATED LOAD (LBS)
a. RETAIL (GROUND FLOOR)	100	1,000
b. ORDINARY ROOF	20	300
c. STAIRS AND EXITS	100	
d. MECHANICAL PLATFORMS*	100	

*OR EQUIPMENT WEIGHT IF GREATER

D. DESIGN SNOW LOAD:

GROUND SNOW LOAD,	PG	0 PSF
FLAT ROOF SNOW LOAD,	PF	0 PSF
EXPOSURE FACTOR,	CE	1.0
SNOW THERMAL FACTOR,	CT	1.0
SNOW IMPORTANCE FACTOR,	IS	1.1
RAIN ON SNOW SURCHARGE		0 PSF

E. DESIGN WIND LOADS:

BASIC WIND SPEED (ULT/SERV),	Vult/Vasd	153 MPH/130 MPH (3 SECOND GUST)
RISK CATEGORY		III
EXPOSURE		D
INTERNAL PRESSURE COEFF	GCPI	±0.18

COMPONENTS AND CLADDING WIND LOADS (ULTIMATE PRESSURES):

Design Wind Pressure (psf):								
			Effective Wind Area (sqft)					
Walls:			10	20	50	100	200	500
Interior	Area 4	+	73.2	69.9	65.5	62.2	58.9	54.6
		-	-79.4	-76.1	-71.7	-68.4	-65.1	-60.8
Edge	Area 5	+	73.2	69.9	65.5	62.2	58.9	54.6
		-	-98.0	-91.4	-82.7	-76.1	-69.5	-60.8
Roof:			10	20	50	100	200	500
Interior	Area 1	+	42.2	38.4	33.5	29.8	29.8	29.8
		-	-67.0	-65.1	-62.7	-60.8	-60.8	-60.8
Edge	Area 2	+	42.2	38.4	33.5	29.8	29.8	29.8
		-	-116.6	-107.3	-95.0	-85.6	-85.6	-85.6
Corner	Area 3	+	42.2	38.4	33.5	29.8	29.8	29.8
		-	-172.5	-161.2	-146.4	-135.2	-135.2	-135.2
Overhang:			10	20	50	100	200	500
Interior	Area 1	+	N/A	N/A	N/A	N/A	N/A	N/A
		-	N/A	N/A	N/A	N/A	N/A	N/A
Edge	Area 2	+	16.0	16.0	16.0	16.0	16.0	16.0
		-	-136.5	-136.5	-136.5	-136.5	-136.5	-136.5
Corner	Area 3	+	16.0	16.0	16.0	16.0	16.0	16.0
		-	-229.5	-207.1	-177.5	-155.1	-155.1	-155.1

CORNER AND EDGE ZONES ARE 6'-9" WIDE.

F. SEISMIC LOADS:

SHORT PERIOD SPECTRAL RESPONSE ACCELERATION,	SS	0.406
1-SEC PERIOD SPECTRAL RESPONSE ACCELERATION,	S1	0.145
SHORT PERIOD DESIGN SPECTRAL RESPONSE ACCELERATION,	SDS	0.399
1-SEC PERIOD DESIGN SPECTRAL RESPONSE ACCELERATION,	SD1	0.215
RISK CATEGORY	III	
SEISMIC DESIGN CATEGORY	D	
SITE CLASS	D	
BASIC SEISMIC-FORCE RESISTING SYSTEM	SPECIAL REINFORCED MASONRY SHEAR WALLS	
RESPONSE MODIFICATION FACTOR,	R	5.5
DEFLECTION AMPLIFICATION FACTOR,	CD	4
SEISMIC IMPORTANCE FACTOR	IE	1.25
SEISMIC RESPONSE COEFFICIENT	CS	0.091
ANALYSIS PROCEDURE	EQUIVALENT LATERAL FORCE	
DESIGN BASE SHEAR	V	105 KIPS

G. THE CONTRACTOR SHALL SUBMIT FINAL ELEVATOR SHOP DRAWINGS SHOWING ALL LOADS PRIOR TO THE FABRICATION OF THE SUPPORTING STRUCTURE.
H. THE CONTRACTOR SHALL VERIFY ALL MECHANICAL EQUIPMENT WEIGHTS, LOCATIONS AND ASSOCIATED OPENINGS WITH THE MECHANICAL CONTRACTOR AND SUBMIT SUCH INFORMATION PRIOR TO FABRICATION OF THE SUPPORTING STRUCTURE. PROMPTLY NOTIFY THE ENGINEER IF THE ACTUAL WEIGHT EXCEEDS THE WEIGHT SHOWN ON THE STRUCTURAL DRAWINGS.
I. PROVISIONS SHALL BE MADE IN THE DETAILING, FABRICATION, AND ERECTION OF ALL CLADDING, PARTITIONS, WALLS, ETC. TO ACCOUNT FOR FLOOR TO FLOOR DEFLECTIONS AND LATERAL FRAME DEFLECTION.

III. FOUNDATIONS

A. FOUNDATION DESIGN IS BASED ON THE GEOTECHNICAL ENGINEERING REPORT, "SHELTER COVE VILLAGE ON HILTON HEAD ISLAND, HILTON HEAD ISLAND, SOUTH CAROLINA", PREPARED BY TERRACON CONSULTANTS, INC. DATED JULY 12, 2011 (TERRACON PROJECT NO. ES115064).
B. CONTRACTOR SHALL OBTAIN A COPY OF THE SOILS REPORT AND ADHERE TO ALL RECOMMENDATION WITHIN, INCLUDING PREPARATION OF SOILS AT BUILDING PAD.
C. ALL SOILS WORK, INCLUDING BACKFILL OF UTILITY TRENCHES AND THE VERIFICATION OF BEARING CAPACITY OF SAME SHALL BE UNDER THE DIRECTION OF A QUALIFIED SOILS ENGINEER. PROXIMITY OF UTILITY TRENCHES TO BUILDING FOUNDATION SYSTEM SHALL BE AS APPROVED BY THE SOILS ENGINEER TO INSURE INTEGRITY OF THE BEARING SOILS.
D. ALL FOOTINGS SHALL BEAR ON UNDISTURBED EARTH OR ENGINEERED FILL AT ELEVATIONS SHOWN ON PLANS AND DETAILS. FLOOR SLABS SHALL BEAR ON 4 INCHES OF COMPACTED STONE. THE MOISTURE RETARDER SHALL BE PLACED BETWEEN THE STONE AND THE SLAB.
E. NO FOUNDATION CONCRETE SHALL BE INSTALLED UNTIL ALL FOUNDATION WORK HAS BEEN COORDINATED WITH UNDERGROUND UTILITIES. THE CONTRACTOR SHALL NOTIFY THE ENGINEER OF RECORD OF ALL CONFLICTS THAT EXIST BETWEEN FOOTINGS AND UTILITIES.
F. ALL FOUNDATIONS OR PORTIONS THEREOF, BELOW GRADE MAY BE EARTH FORMED BY NEAT EXCAVATIONS.
G. UNLESS OTHERWISE SHOWN, ALL FOOTINGS SHALL BE CENTERED ON WALLS AND/OR COLUMNS.
H. THE CONTRACTOR SHALL DETERMINE THE EXTENT OF CONSTRUCTION DEWATERING REQUIRED FOR THE EXCAVATION. THE CONTRACTOR SHALL SUBMIT TO THE GEOTECHNICAL ENGINEER FOR REVIEW THE PROPOSED PLAN FOR CONSTRUCTION DEWATERING, PRIOR TO EXCAVATION.
I. FOOTINGS SHALL NOT BE PLACED ON FROZEN SUBGRADE OR IN STANDING WATER.
J. ALLOWABLE BEARING PRESSURE:
 1. SPREAD FOOTING 2,000 PSF
K. MINIMUM FOOTING BEARING DEPTH = -2'-0"

IV. CONCRETE

A. CONCRETE SHALL CONFORM TO THE FOLLOWING REQUIREMENTS:
 CONCRETE 28 DAY COMPRESSIVE STRENGTH AND DENSITY REQUIREMENTS:

USAGE	STRENGTH (PSI)	CONC. TYPE
a. ALL CONCRETE NOT OTHERWISE SPECIFIED	4000	NWT
b. FOUNDATIONS WALLS, FOOTINGS, GRADE BEAMS	3000	NWT
c. SLAB-ON-GRADE	3000	NWT
d. METAL DECK SLABS	4000	NWT

 1. INDICATED CONCRETE TYPES SHALL BE PROPORTIONED FOR MAXIMUM WATER CEMENT RATIO OF 0.45.
 2. NWT = NORMAL WEIGHT CONCRETE
 3. ALL CONCRETE SHALL HAVE ALLOWABLE UNIT SHRINKAGE OF 0.045% AT 28 DAYS. (SEE ASTM C157)
 4. ALL SLABS TO RECEIVE MOISTURE SENSITIVE FLOOR COVERINGS SHALL HAVE MAXIMUM WATER/CEMENT RATIO OF 0.45.
 5. EXTERIOR CONCRETE SLABS SHALL HAVE 4% TO 6% ENTRAINED AIR
B. ALL CONCRETE CONSTRUCTION SHALL CONFORM TO THE CURRENT "ACI MANUAL OF CONCRETE PRACTICE".
C. PORTLAND CEMENT SHALL CONFORM TO ASTM C-150, TYPE I OR II.
D. ALL AGGREGATE FOR NORMAL WEIGHT CONCRETE SHALL MEET ASTM C 33.
E. ALL REINFORCEMENT SHALL CONFORM TO THE FOLLOWING SPECIFICATIONS:
 1. ALL REINFORCING, UNO: ASTM A615 GRADE 60
 2. DEFORMED BAR ANCHORS (DBA): ASTM A496 (75 KSI)
 3. WELDED WIRE REINFORCEMENT (WWR):
  a. DEFORMED WIRE: ASTM A 497 (70 KSI)
 4. STEEL FIBERS: ASTM A820 TYPE I, II, & V
 5. MACROSYNTHETIC FIBERS: ASTM D7508
F. CONCRETE FOR COMPOSITE STEEL DECK SHALL BE REINFORCED FOR TEMPERATURE & SHRINKAGE BY ONE OF THE FOLLOWING METHODS:
 1. WWR: WELDED WIRE REINFORCEMENT AS SPECIFIED ON PLANS BUT NOT LESS THAN 6X6-W1.4XW1.4 WWR
 2. STEEL FIBERS: UNO STEEL FIBERS MAY BE USED TO SUBSTITUTE WWR WHEN ADDED TO CONCRETE CONFORMING TO ASTM C1116, TYPE I. DOSAGE RATES SHALL BE DETERMINED BY THE FIBER MANUFACTURER FOR THE APPLICATION, BUT NOT LESS THAN 25 LB/CU. YD.
 3. MACROSYNTHETIC FIBERS: UNO MACROSYNTHETIC FIBERS MAY BE USED TO SUBSTITUTE WWR WHEN ADDED TO CONCRETE CONFORMING TO ASTM C1116, TYPE III. DOSAGE RATES SHALL BE DETERMINED BY THE FIBER MANUFACTURER FOR THE APPLICATION, BUT NOT LESS THAN 4 LB/CU YD.
G. CONCRETE FOR SLAB-ON-GRADE SHALL BE REINFORCED FOR TEMPERATURE OR SHRINKAGE BY ONE OF THE FOLLOWING METHODS:
 1. WWR: WELDED WIRE REINFORCEMENT AS SPECIFIED ON PLANS.
 2. FIBERS: UNO STEEL FIBERS OR MACROSYNTHETIC FIBERS MAY BE USED TO SUBSTITUTE WWR. DOSAGE RATES SHALL BE DETERMINED BY THE FIBER MANUFACTURER FOR THE APPLICATION, BUT NOT LESS THAN 33 LB/CU YD. FOR STEEL FIBERS OR 3 LB/CU YD. FOR MACROSYNTHETIC FIBERS.
H. REINFORCEMENT DETAILING:
 1. REINFORCEMENT SHALL BE DETAILED AND PLACED IN ACCORDANCE WITH ACI 315.
 2. DEVELOPMENT AND SPLICE LENGTHS ARE IN TENSION UNLESS OTHERWISE INDICATED AND SHALL BE AS TABULATED IN THE SPLICE LENGTH TABLE, UNLESS OTHERWISE INDICATED.
 3. LAP WWR ONE CROSSWIRE SPACING PLUS 2".
 4. PROVIDE CORNER BARS AT ALL FOOTINGS AND WALL INTERSECTIONS TO MATCH HORIZONTAL REINFORCING SIZE AND SPACING. AT INTERSECTIONS OF CONTINUOUS SPREAD FOOTINGS EXTEND ALL BARS TO FAR SIDE OF INTERSECTING FOOTING
 5. REINFORCEMENT SHALL BE SECURELY PLACED TO PREVENT DISPLACEMENT DURING CONCRETE PLACEMENT. PROVIDE THE FOLLOWING CONCRETE COVER FOR REINFORCING [ACI 318 SECTION 7.7 AND IBC TABLE 720.1], UNLESS SPECIFICALLY DETAILED OTHERWISE:
  a. CAST AGAINST EARTH 3"
  b. EXPOSED TO EARTH/WEATHER
   #6 THRU #18 2"
   #5 & SMALLER 1 1/2"
  c. SLABS, WALLS, JOISTS
   #11 & SMALLER 3/4"
 7. PROVIDE DOWELS TO MATCH REINFORCEMENT SIZE AND SPACING INDICATED FOR ALL STRUCTURAL ELEMENTS, UNLESS OTHERWISE INDICATED.
I. FOUNDATION WALLS, GRADE BEAMS AND FOOTINGS SHALL BE CAST IN ALTERNATE PANELS NOT TO EXCEED 60'-0" IN LENGTH. SHEAR KEYS SHALL BE PROVIDED AT EACH CONSTRUCTION JOINT AND SHALL BE LOCATED AT 1/3 POINTS OF SPANS. .
J. SLABS AND BEAMS OR JOISTS SHALL BE CAST MONOLITHICALLY UNLESS OTHERWISE INDICATED.
K. CHAMFER ALL PERMANENTLY EXPOSED CONCRETE EDGES 3/4 INCH, UNO.
L. SEE ARCHITECTURAL AND MECHANICAL DRAWINGS FOR LOCATIONS OF OPENINGS AND SLEEVES IN CONCRETE WALLS AND SUPPORTED FLOORS. SPREAD REINFORCEMENT AT OPENINGS AND SLEEVES UNLESS OTHERWISE SHOWN. DO NOT CUT REINFORCEMENT. SEE TYPICAL REINFORCEMENT DETAILS FOR OPENINGS IN SLABS AND WALLS FOR ADDITIONAL REQUIREMENTS.
M. NO HOLES OR OPENINGS THROUGH FOUNDATION WALLS AND/OR FOOTINGS WITHOUT ENGINEER'S APPROVAL.
N. ALUMINUM SHALL NOT BE EMBEDDED IN ANY CONCRETE.

V. STRUCTURAL STEEL

A. ALL HOT ROLLED STEEL PLATES, SHAPES, SHEET PILING, AND BARS SHALL BE NEW STEEL CONFORMING TO ASTM SPECIFICATION A6-98A.
B. STRUCTURAL STEEL SHALL BE AS FOLLOWS, U.N.O.:
 1. WIDE FLANGE SHAPES ASTM A992 FY = 50 KSI
 2. STRUCTURAL RECTANGULAR TUBING ASTM A500 GRADE B FY = 46 KSI
 3. ALL OTHER STRUCTURAL STEEL ASTM A36 FY = 36 KSI
 4. CONNECTION MATERIALS:
  a. BEAM COLUMN STIFFENER PLATES AND DOUBLER PLATES: ASTM A572 GRADE 50
  b. ALL OTHER CONNECTION MATERIAL, U.N.O.: ASTM A36 UNLESS A HIGHER GRADE OF STEEL IS REQUIRED BY STRENGTH AND PROVIDED THE RESULTING SIZES ARE COMPATIBLE WITH THE CONNECTED MEMBERS.
 8. ASTM A572 GRADE 50 IS ACCEPTABLE AS A SUBSTITUTE FOR A992
C. STRUCTURAL STEEL SHALL MEET THE LATEST AISC "SPECIFICATION FOR THE DESIGN, FABRICATION AND ERECTION OF STRUCTURAL STEEL FOR BUILDINGS".
D. THE CENTERLINES OF ALL COLUMNS AND BEAMS SHALL BE LOCATED ON COLUMN LINES UNLESS OTHERWISE SHOWN.
E. CONNECTIONS:
 1. BOLTS SHALL BE A325N TYPE 1, UNLESS OTHERWISE INDICATED.
 2. ALL BOLTS SHALL BE SNUG TIGHT U.N.O. BOLTS SHALL BE TIGHTENED UNTIL ALL PLIES OF THE JOINT ARE IN FIRM CONTACT.
 3. BOLTS THAT ARE DESIGNATED AS SLIP CRITICAL SHALL BE FULLY TENSIONED TO THE MINIMUM LOADS AS INDICATED IN THE "SPECIFICATION OF STRUCTURAL JOINTS USING ASTM325 OR A490 BOLTS".
 4. ANCHOR RODS SHALL CONFORM TO ASTM F1554, GRADE 36, UNLESS NOTED OTHERWISE.
 5. THREADED RODS SHALL CONFORM TO ASTM A36
 6. BOLTED MOMENT CONNECTIONS SHALL BE SLIP-CRITICAL CONNECTIONS. OTHER CONNECTIONS SHALL BE BEARING CONNECTIONS WITH THREADS INCLUDED IN SHEAR PLANES.
 7. WELDING SHALL CONFORM TO THE STANDARDS SET FORTH IN AWS PUBLICATION, "WELDING IN BUILDING CONSTRUCTION".
 8. UNLESS NOTED OTHERWISE, ELECTRODES FOR WELDING SHALL CONFORM TO E70XX (SMAW), F7XX-EXXX (SAW), ER70S-X (GMAW), OR E7XT-X (FCAW).
 9. WELDS INDICATED "CJP" SHALL BE COMPLETE JOINT PENETRATION GROOVE WELDS. FABRICATOR SHALL PRODUCE COMPLETE JOINT PENETRATION GROOVE WELDS WHICH CONFORM TO ALL AWS D1.1 QUALIFIED WELD REQUIREMENTS AND WHICH ARE APPLICABLE TO THE SPECIFIC CONDITIONS SHOWN.
 10. ALL ERECTION DRAWINGS SHALL SHOW ALL FIELD WELDS REQUIRED.
 11. ALL STEEL BEAMS BEARING ON MASONRY TO HAVE MINIMUM OF 8" BEARING LENGTH.
 12. CONNECTION DETAILS NOT COMPLETELY DETAILED ON THE DRAWINGS SHALL BE DESIGNED BY THE CONTRACTOR'S ENGINEER TO RESIST FORCES INDICATED ON THE DRAWINGS. INDICATED FORCES ARE BASED ON FACTORED LOADS AND ARE INTENDED FOR USE WITH THE LOAD AND RESISTANCE FACTOR DESIGN METHOD. WHERE NONE ARE INDICATED, BEAMS SHALL BE DESIGNED FOR AN END REACTION EQUAL TO 1/2 OF THE TOTAL UNIFORM LOAD CAPACITY TABULATED IN THE UNIFORM LOAD TABLES OF THE AISC MANUAL. THE CONTRACTOR SHALL EMPLOY THE ASSISTANCE OF A PROFESSIONAL ENGINEER REGISTERED IN THE STATE OF THE PROJECT. DESIGN CALCULATIONS FOR THE CONNECTIONS DESIGNED BY THE SPECIALTY ENGINEER SHALL BE SUBMITTED FOR THE FILES OF THE ARCHITECT AND ENGINEER. CALCULATIONS SHALL BEAR THE SEAL OF THE PROFESSIONAL ENGINEER REGISTERED IN THE STATE OF THE PROJECT. SHOP DRAWINGS CONTAINING CONNECTIONS FOR WHICH CALCULATIONS HAVE NOT BEEN RECEIVED WILL BE RETURNED UNCHECKED AS AN INCOMPLETE SUBMITTAL. CONNECTIONS ECCENTRICITY SHALL BE TAKEN INTO ACCOUNT WHEN DESIGNED AND DETAILING THE CONNECTION.
F. WHERE THE WORK OF OTHER TRADES REQUIRES CUTS, HOLES, ETC., IN STRUCTURAL STEEL MEMBERS, CUTS, HOLES, ETC., SHALL BE MADE IN THE SHOP AND SHALL BE SHOWN ON THE SHOP DRAWINGS. MAKING HOLES OR CUTS IN STRUCTURAL STEEL MEMBERS IN THE FIELD WILL NOT BE PERMITTED WITHOUT SPECIFIC APPROVAL OF THE ENGINEER.
G. ALL EXPOSED TO VIEW MEMBERS SHALL MEET THE REQUIREMENTS OF AISC FOR ARCHITECTURALLY EXPOSED STRUCTURAL STEEL.
H. BAR GRATINGS SHALL BE STEEL 1 1/2 x 3/16 GALVANIZED GRATING. GRATING SHALL BE CLAMPED TO SUPPORT BEAMS WITH GALVANIZED CLAMPS THAT DO NOT REQUIRE DRILLING OF BEAMS. EDGES AND OPENINGS IN GRATING MORE THAN 4" IN DIAMETER SHALL BE BANDED.
I. GROUT BELOW BASE PLATES SHALL BE NON-METALLIC, NON-SHRINK GROUT WITH A MINIMUM STRENGTH OF 6000 PSI WHEN BEARING ON 3000 PSI CONCRETE OR LESS, STRENGTH OF 8000 PSI WHEN BEARING ON CONCRETE BETWEEN 3000 AND 4000 PSI.
J. ALL STRUCTURAL STEEL SHALL BE SHIPPED WITH ONE COAT OF SHOP PRIMER EXCEPT THOSE MEMBERS THAT ARE GALVANIZED OR IN AREAS SCHEDULED TO RECEIVE FIRE PROOFING. THE CONTRACTOR SHALL BE RESPONSIBLE FOR COORDINATING AREAS TO BE FIRE PROOFED.

VI. DECKING

A. PROVIDE DECK IN LENGTHS ADEQUATE FOR A THREE-SPAN CONDITION WHERE POSSIBLE.
B. THE CONTRACTOR SHALL VERIFY THE SIZE AND LOCATION OF ALL OPENINGS, SLEEVES, INSERTS, ETC., WITH SHOP DRAWINGS OF THE EQUIPMENT TO BE INSTALLED.
C. STEEL DECK SHALL BE ATTACHED TO ALL MEMBERS ON WHOM IT BEARS.
D. SHEAR STUDS:
 1. 3/4"Ø X 4 11/16" BW FOR 6.0" TOTAL SLAB THICKNESS
 2. ALL SHEAR STUDS TO BE INSTALLED USING NELSON STUD GUN. ALL FERRULES SHALL BE REMOVED FROM THE BASE OF THE STUDS BEFORE PLACING THE CONCRETE SLAB.
 3. ALL SHEAR STUDS TO MEET ASTM A108 - FY = 60 KSI
E. COMPOSITE METAL DECK SHALL BE ATTACHED TO SUPPORTING MEMBERS WITH 5/8" PUDDLE WELDS AT 12"OC. WIRE BRUSH ALL WELDS AND TOUCH UP WITH GALVANIZED REPAIR PAINT BEFORE PLACING CONCRETE FLOOR SLAB.
F. DECK MANUFACTURER SHALL PROVIDE L2 1/2 x 2 1/2 x 3/16 WELDED TO FACE OF COLUMNS TO SUPPORT FLOOR DECK AT ALL LOCATIONS WHERE DECKING IS CUT AROUND COLUMNS.
G. UNLESS INDICATED OTHERWISE, PROVIDE POUR STOPS OF LENGTH, DEPTH AND GAGE APPROPRIATE FOR OVERHANG AND SLAB DEPTH.
H. COMPOSITE SLABS SHALL BE PLACED TO A MINIMUM OF THE THICKNESS INDICATED AND SHALL BE SCREEDED LEVEL.
I. CONDUIT SHALL NOT BE CAST WITHIN ANY ELEVATED SLABS WITHOUT ENGINEER APROVAL. IN NO CASE SHALL CONDUIT OUTER DIAMETER EXCEED 1/3 OF THE SLAB THICKNESS ABOVE THE DECK.

VII. MASONRY:

A. HOLLOW CONCRETE BLOCK (MASONRY) UNITS SHALL BE LIGHTWEIGHT WITH A MINIMUM COMPRESSIVE STRENGTH OF 1900 PSI ON THE NET AREA AND 1000 PSI ON THE GROSS AREA (F'M = 1500PSI) AND SHALL CONFORM TO ASTM C-90.
B. ALL MORTAR FOR USE IN MASONRY SHALL CONFORM TO ASTM C-270, TYPE M OR S. ALL GROUT FOR USE IN MASONRY SHALL CONFORM TO ASTM C-476, MIN. 3000 PSI.
C. REINFORCING BARS TO MEET ASTM A-615, GRADE 60.
D. VERTICAL AND HORIZONTAL REINFORCING SHALL BE CONTINUOUS AND LAPPED A MINIMUM OF 72 BAR DIAMETERS.
E. HOLD VERTICAL BARS STRAIGHT AND TRUE AND ACCURATELY LOCATED IN WALL AS DETAILED. INSTALL REBAR POSITIONERS @ 4'-0"OC MAXIMUM THAT ARE DESIGNED TO HOLD REBAR IN PROPER LOCATION WITHIN THE GROUTED CELL.
F. PROVIDE #9 LADDER OR TRUSS TYPE JOINT REINFORCEMENT AT 16"OC FOR TYPICAL HORIZONTAL REINFORCING.
G. ALL REINFORCED MASONRY COLUMN AND WALL SECTIONS REQUIRE DOWELS FROM FOOTING, SAME SIZE AND QUANTITY AS VERTICAL REINFORCEMENT IN COLUMN OR WALL.
H. GROUT FILL ALL CELLS AND ALL WALLS BELOW GRADE. SLUSH JOINT BETWEEN WYTHES.
I. LOW-LIFT GROUTING PROCEDURES SHALL BE USED FOR ALL FILLED-CELL MASONRY CONSTRUCTION.
J. IF HIGH-LIFT GROUTING PROCEDURES ARE FOLLOWED, PROVIDE CLEANOUTS AT EACH LOCATION.
 1. GROUT POURS SHALL NOT EXCEED 5 FEET PER LIFT, UNLESS CLEANOUTS ARE PROVIDED IN THE BOTTOM COURSE OF EACH 5 FOOT LIFT.
 2. MECHANICALLY VIBRATE ALL LIFTS IN EXCESS OF 1 FOOT.
 3. SHALL NOT BE STOPPED WITHIN 1-1/2" OF BED JOINT.
 4. TOTAL GROUT POUR SHALL NOT EXCEED 24 FEET WHEN GROUTING THE CELLS OF HOLLOW MASONRY.
K. ALL CMU TO BE LAID IN RUNNING BOND PATTERN.
L. SHORE ALL MASONRY LINTELS UNTIL MASONRY AND GROUT HAVE BEEN ALLOWED TO SET FOR A MINIMUM OF 7 DAYS.
M. ALL MASONRY WALLS HAVE BEEN DESIGNED IN THE FINAL CONSTRUCTED CONFIGURATION ONLY ASSUMING FULL BRACING TOP, BOTTOM, AND/OR SIDE OF WALL. DURING CONSTRUCTION, THE CONTRACTOR SHALL BRACE ALL CMU WALLS TO RESIST ERECTION AND LATERAL LOADS THAT MAY BE APPLIED PRIOR TO COMPLETION OF CONSTRUCTION.

VIII. METAL STUD FRAMING

A. FABRICATION, AND ERECTION SHALL CONFORM TO AISI "SPECIFICATIONS FOR THE DESIGN OF COLD FORMED STEEL STRUCTURAL MEMBERS", LATEST EDITION. ALL METAL STUDS SHALL BE GALVANIZED.
B. ALL 33 MIL AND 43 MIL STUDS, JOISTS, TRACK, BRIDGING, END CLOSURES, AND ACCESSORIES SHALL BE FORMED FROM STEEL THAT CORRESPONDS TO THE REQUIREMENTS OF AISI "SPECIFICATIONS FOR THE DESIGN OF COLD FORMED STEEL STRUCTURAL MEMBERS" WITH A MINIMUM YIELD OF 33 KSI U.N.O. ALL 54 MIL AND THICKER MEMBERS SHALL HAVE A MINIMUM YIELD OF 50 KSI.
C. ALL MATERIAL AND ACCESSORIES SHALL BE FORMED FROM STEEL HAVING A G-60 GALVANIZED COATING MEETING ASTM A 635.
D. UNLESS NOTED OTHERWISE, ALL SCREWS OR PINS SHALL BE NON-CORROSIVE NO. 8-18 (D=.125") OR LARGER. DO NOT USE STAINLESS STEEL OR COPPER-COATED FASTENERS.
E. UNLESS NOTED OTHERWISE, TRACKS SHALL BE THE SAME DEPTH AS STUDS OR JOISTS AND OF EQUAL OR THICKER GAUGE THAN STUDS OR JOISTS. TRACKS SHALL BE CONNECTED TO SUPPORT AT 16" O.C. MAX. STUDS OR JOISTS SHALL BE CONNECTED TO TRACKS AT EACH SIDE.
F. THE QUANTITY OF STUDS AND JOISTS DISPLACED OR CUT FOR OPENING SHALL BE PLACED HALF ON EACH SIDE OF OPENING PER METAL STUD HEADER SCHEDULE ON THIS SHEET.
G. INSTALLATION OF CURTAIN WALL FRAMING SHALL ACCOMMODATE VERTICAL DISPLACEMENT OF THE PRIMARY STRUCTURE.
H. THE DESIGN OF SLIP TRACKS SHALL CONFORM TO GUIDELINES ESTABLISHED IN SSMA TECHNICAL NOTE NO. 1 PUBLISHED JAN. 2001.
I. PROVIDE THE MANUFACTURER'S STANDARD TRACK, CLIP ANGLES, BRACING, REINFORCEMENTS, FASTENERS, AND ACCESSORIES AS RECOMMENDED BY THE MANUFACTURER FOR THE APPLICATION INDICATED AND AS NEEDED TO PROVIDE A COMPLETE FRAMING SYSTEM. UNLESS OTHERWISE NOTED, INSTALL THE FRAMING SYSTEM IN ACCORDANCE WITH THE MANUFACTURER'S WRITTEN INSTRUCTIONS AND RECOMMENDATIONS.
J. WALL SHEATHING SHALL BE FASTENED TO SUPPORTING FRAMING WITH NO. 10, FLAT-HEAD SELF-DRILLING TAPPING SCREWS WITH A MINIMUM HEAD DIAMETER OF 0.333 INCHES AT THE SPACING INDICATED BELOW UNLESS NOTED OTHERWISE IN THE SHEAR WALL SCHEDULE:
 1. WALL EDGE ____ 6"OC
 2. SUPPORTED PANEL EDGES AWAY FROM EDGE OF WALL ____ 6"OC
 3. CENTER OF PANELS ____ 12"OC
K. PREPUNCHED HOLES SHALL NOT BE LOCATED WITHIN 10 INCHES OF THE STUD SUPPORT LOCATIONS.
L. USE FLUX COVERED, MILD STEEL ELECTRODES AWS E-6012, E-6013, OR E-7014 FOR WELDING STEEL STUDS. ALL WELDING SHALL BE PERFORMED IN ACCORDANCE AWS PROCEDURES. CONSULT MANUFACTURER FOR EQUIPMENT RECOMMENDATIONS AND PROPER ELECTRODE SELECTION. TOUCH UP WELDED AREAS WITH A ZINC RICH PAINT.

IX. LIGHT GAUGE TRUSSES

A. ALL PREFABRICATED LIGHT GAUGE TRUSSES SHALL BE DESIGNED TO MEET THE LOADINGS SPECIFIED.
B. SHOP DRAWINGS AND CALCULATIONS SHALL BE SUBMITTED BY A REGISTERED PROFESSIONAL ENGINEER LICENSED IN THE STATE OF THE PROJECT.
C. ALL TRUSS-TO-TRUSS CONNECTIONS SHALL BE DESIGNED BY THE DELEGATED TRUSS ENGINEER.
D. TRUSSES ARE TO BE DESIGNED TO BEAR ONLY ON THOSE WALLS INDICATED ON THESE DRAWINGS.
E. COORDINATE TRUSS WEB CONFIGURATION WITH MECHANICAL DUCTWORK AS INDICATED ON MECHANICAL SHEETS. PROVIDE CLEAR SPACE BETWEEN WEBS AS REQUIRED TO INSTALL DUCTWORK.
F. CONCENTRATED LOADS FROM SUSPENDED OR SUPPORTED EQUIPMENT SHALL BE COORDINATED WITH THE DESIGN OF THE TRUSSES.
G. PROVIDE ALL TEMPORARY AND PERMANENT TRUSS BRACING AND BRIDGING AS REQUIRED AND SHOWN ON THE TRUSS MANUFACTURERS SHOP DRAWINGS AS THEY ARE ERECTED.
H. PROVIDE DIAGONAL BRACING AT ROOF TRUSS VERTICALS WHERE INDICATED ON SECTIONS, DETAILS, OR TRUSS ELEVATION SCHEMATICS.
I. INSTALL STRONG BACKS, BRACING AND/OR BRIDGING PRIOR TO DECK INSTALLATION AND AS TRUSSES ARE ERECTED.
J. INSTALL CONTINUOUS BOTTOM CHORD BRACING AT 6 FEET OC MAXIMUM AT ALL AREAS WHERE A RIGID CEILING IS NOT ATTACHED DIRECTLY TO THE TRUSS BOTTOM CHORD.
K. ALL HURRICANE TIES SHALL BE INSTALLED PRIOR TO SHEATHING.
L. REFER TO ARCHITECTURAL DRAWINGS FOR TRUSS PROFILES.
M. TRUSS CHORDS SHALL BE CONTINUOUS AND SHALL NOT BE TRIMMED. ALL SPLICES SHALL BE SHOWN ON SHOP DRAWINGS.
N. TRUSS MEMBERS SHALL BE MANUFACTURED WITH UNPUNCHED STUDS.

X. SUBMITTALS

A. THE GENERAL CONTRACTORS SHALL REVIEW AND STAMP ALL SHOP DRAWINGS BEFORE SUBMITTING FOR REVIEW. SHOP DRAWINGS SHALL BE SUBMITTED TO THE ARCHITECT AND/OR ENGINEER AND HAVE THE ENGINEER'S SHOP DRAWING STAMP AFFIXED PRIOR TO FABRICATION. FABRICATION AND ERECTION SHALL BE FROM REVIEWED SHOP DRAWINGS.
B. A RECORD SET OF APPROVED SHOP DRAWINGS SHALL BE KEPT IN THE FIELD BY THE GENERAL CONTRACTOR.
C. ANY DEVIATION FROM, ADDITION TO, SUBSTITUTION FOR, OR MODIFICATION TO THE STRUCTURE OR ANY PART OF THE STRUCTURE DETAILED ON THE CONTRACT DOCUMENTS SHALL BE SUBMITTED IN WRITING TO THE ENGINEER FOR REVIEW. SHOP DRAWINGS SUBMITTED FOR REVIEW DO NOT CONSTITUTE "IN-WRITING" UNLESS IT IS CLEARLY NOTED THAT SPECIFIC CHANGES ARE BEING SUGGESTED.
D. THE CONTRACTOR SHALL PREPARE A LIST AND SCHEDULE OF ALL STRUCTURAL SUBMITTALS PRIOR TO CONSTRUCTION.
E. THE FOLLOWING SHOP DRAWINGS SHALL BE SUBMITTED BY THE CONTRACTOR FOR THE ENGINEER'S REVIEW:
 1. MISCELLANEOUS STEEL
 2. STRUCTURAL STEEL, SHOP AND ERECTION DRAWINGS (1, 3)
 3. STRUCTURAL STEEL BUILDING ERECTION-BRACING DRAWINGS AND ERECTION TOWER/SHORING DRAWINGS (1, 2)
 4. COMPOSITE BEAM SHEAR CONNECTOR LAYOUT
 5. COMPOSITE METAL DECK
 6. ROOF METAL DECK
 7. CONCRETE MIX DESIGNS
 8. REINFORCING STEEL
 9. ELEVATORS (2)
 10. LIGHT GAUGE METAL TRUSSES (1, 3)
 11. STEEL STAIRS (1, 3)
F. ITEMS MARKED (1) SHALL HAVE SHOP DRAWINGS SEALED BY A REGISTERED ENGINEER IN THE STATE WHERE THE PROJECT IS LOCATED. ITEMS MARKED (2) SHALL BE SUBMITTED TO ENGINEER FOR OWNER'S RECORD ONLY AND WILL NOT HAVE THE ENGINEER'S SHOP DRAWING STAMP AFFIXED. ITEMS MARKED (3) SHALL HAVE DESIGN CALCULATIONS SEALED BY A REGISTERED ENGINEER IN THE STATE WHERE THE PROJECT IS LOCATED.
 1. CONTRACTOR SHALL SUBMIT ONE SET OF REPRODUCIBLES AND TWO SETS OF PRINTS FOR ALL SHOP DRAWINGS SPECIFIED TO BE RETURNED BY THE ENGINEER.
 2. THE OMISSION FROM THE SHOP DRAWINGS OF ANY MATERIALS REQUIRED BY THE CONTRACT DOCUMENTS TO BE FURNISHED SHALL NOT RELIEVE THE CONTRACTOR OF THE RESPONSIBILITY OF FURNISHING AND INSTALLING SUCH MATERIALS, REGARDLESS OF WHETHER THE SHOP DRAWINGS HAVE BEEN REVIEWED AND APPROVED.
G. THE USE OF ELECTRONIC FILES OR REPRODUCTIONS OF THESE CONTRACT DOCUMENTS BY ANY CONTRACTOR, SUBCONTRACTOR, ERECTOR, FABRICATOR, OR MATERIAL SUPPLIER IN LIEU OF PREPARATION OF SHOP DRAWINGS SIGNIFIES THEIR ACCEPTANCE OF ALL INFORMATION SHOWN HEREON AS CORRECT, AND OBLIGATES THEMSELVES TO ANY JOB EXPENSE, REAL OR IMPLIED, ARISING DUE TO ANY ERRORS THAT MAY OCCUR HEREON.

XI. SPECIAL INSPECTION AND TESTING (CHAPTER 17)

A. ALL TESTS AND INSPECTIONS SHALL BE PERFORMED BY AN INDEPENDENT TESTING AND INSPECTION AGENCY. THE SPECIAL INSPECTOR FROM THIS TESTING AGENCY SHALL OBSERVE THE WORK FOR CONFORMANCE TO THE DESIGN DRAWINGS AND SPECIFICATIONS.
B. THE SPECIAL INSPECTOR SHALL FURNISH INSPECTION REPORTS TO THE BUILDING OFFICIAL, THE ENGINEER OR ARCHITECT OF RECORD, AND ALL OTHER DESIGNATED INDIVIDUALS. ALL DISCREPANCIES SHALL BE BROUGHT TO THE ATTENTION OF THE CONTRACTOR FOR CORRECTION, THEN, IF NOT CORRECTED, TO THE PROPER DESIGN AUTHORITY AND TO THE BUILDING OFFICIAL.
C. THE SPECIAL INSPECTOR SHALL SUBMIT A FINAL SIGNED REPORT STATING WHETHER THE WORK REQUIRING SPECIAL INSPECTION WAS, TO THE BEST OF THE INSPECTOR'S KNOWLEDGE, IN CONFORMANCE WITH THE APPROVED DESIGN DRAWINGS, SPECIFICATIONS, SOILS REPORT AND APPLICABLE WORKMANSHIP PROVISIONS OF THE INTERNATIONAL BUILDING CODE.
D. MASONRY WORK SHALL HAVE SPECIAL INSPECTION AS DEFINED BY THE AFOREMENTIONED BUILDING CODE.
E. SEE SCHEDULE OF SPECIAL INSPECTIONS LOCATED ON SHEET S2.0.

PROTECTION OF OPENINGS:

GLAZED OPENINGS IN BUILDINGS LOCATED WITHIN 1 MILE OF THE COASTAL MEAN HIGH WATER LINE WHERE THE ULTIMATE DESIGN WIND SPEED VULT IS 130 OR GREATER OR IN AREAS WHERE THE ULTIMATE DESIGN WIND SPEED VULT IS 140 MPH OR GREATER SHALL BE PROTECTED FROM WIND-BORNE DEBRIS. GLAZED OPENING PROTECTION FOR WIND-BORNE DEBRIS SHALL MEET THE REQUIREMENTS OF SSTD 12, ASTM E 1886 AND ASTM E 1996 WITH MODIFICATIONS PER SECTION 1609.1.2.4 OF THE FBC, OR TAS 201, 202 AND 203 OR AAMA 506 REFERENCED THEREIN.

1. GLAZED OPENINGS LOCATED WITHIN 30 FEET OF GRADE SHALL MEET THE REQUIREMENTS OF THE LARGE MISSILE TEST OF ASTM E 1996.
2. GLAZED OPENINGS LOCATED MORE THAN 30 FEET ABOVE GRADE SHALL MEET THE PROVISIONS OF THE SMALL MISSILE TEST OF ASTM E 1996.

FOR RISK CATEGORY II BUILDINGS AND III BUILDINGS, EXCEPT HEALTH CARE FACILITIES, THE ULTIMATE DESIGN WIND SPEED VULT SHALL BE BASED ON FIGURE 1609A AND FOR RISK CATEGORY IV BUILDINGS AND RISK CATEGORY III HEALTH CARE FACILITIES, ULTIMATE DESIGN WIND SPEED VULT SHALL BE BASED ON FIGURE 1609B.

SOUTH CAROLINA
Britt, Peters & Associates, Inc.
No. C00781
CERTIFICATE OF AUTHORIZATION

BRITT PETERS AND ASSOCIATES INC.
consulting engineers
101 W. Camperdown Way
Suite 601
Greenville, SC 29601
(864) 271-8869
Fax (864) 233-5140
www.brittpeters.com
BPA Job No. 13421

NARRAMORE ASSOCIATES, INC.
Architects & Planners
AMERICAN INSTITUTE OF ARCHITECTS
P.O. Box 8438 Greenville, SC 29604
310 Mills Ave. Greenville, SC 29605
Phone: 864.242.9881
Fax: 864.232.5202
plans@narramore-architects.com

©2014, NARRAMORE ASSOCIATES, INC.
COPYRIGHT PROTECTED BY FEDERAL LAW

SEAL

SOUTH CAROLINA
REGISTERED PROFESSIONAL ENGINEER
No. 20920
STEVEN C. DOVER

Blanchard & Calhoun COMMERCIAL
2743 PERIMETER PKWY
BLDG 100 STE 370
AUGUSTA, GA 30909

THE POSEIDON - BLDG. 121
24 SHELTER COVE LANE
HWY. 278, MILE MARKER 8
HILTON HEAD ISLAND, SC 29928

REVISIONS

DOCUMENT DATA
BUILDING 121
PROJECT NUMBER
13914
ISSUE DATE
12-08-13

SHELTER COVE
BLDG 121

S0.0

GENERAL NOTES

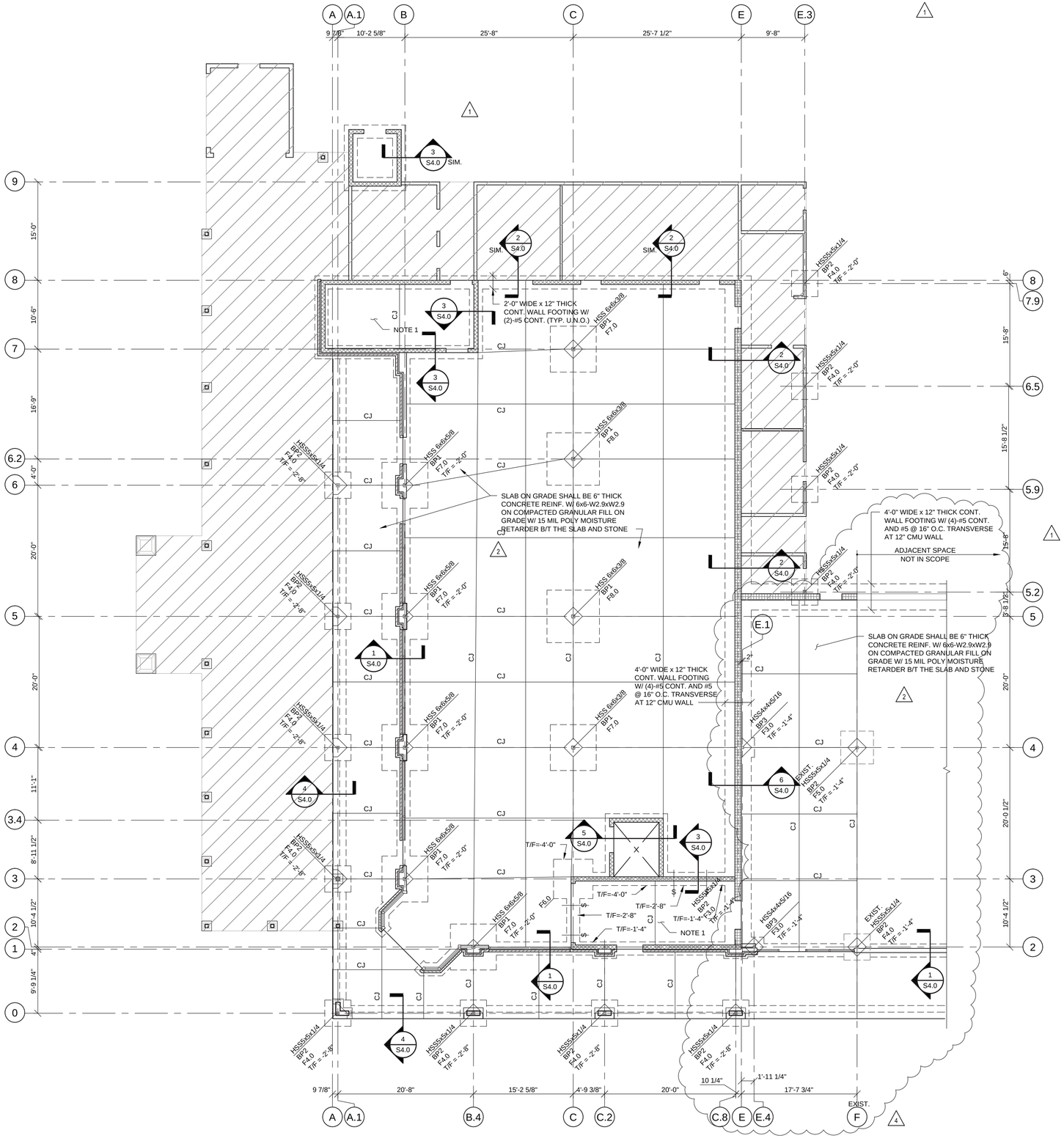

COLUMN FOOTING SCHEDULE
2,000 PSF

MARK	SIZE	THICKNESS	REINFORCING
F3.0	3'-0" SQ.	12"	3#5 EACH WAY BOTTOM
F4.0	4'-0" SQ.	12"	4#5 EACH WAY BOTTOM
F5.0	5'-0" SQ.	12"	7#5 EACH WAY BOTTOM
F6.0	6'-0" SQ.	16"	8#5 EACH WAY BOTTOM
F7.0	7'-0" SQ.	16"	7#5 EACH WAY BOTTOM
F8.0	8'-0" SQ.	16"	9#5 EACH WAY BOTTOM

FOUNDATION PLAN

SCALE: 1/8"=1'-0"
FIN. FLR. EL. = 0'-0"
CJ DENOTES CONTROL JOINT OR CONSTRUCTION JOINT, REFERENCE SHEET S3.0 FOR DETAILS
DENOTES 8" CMU WALL W/ #5 @ 16"OC (TYP. UNO), S3.0 AND S3.1 FOR TYP. DETAILS
DENOTES 12" CMU WALL W/ #5 @ 24"OC
TOP OF INT. FTG. EL. = -0'-8" (GRID "C" ONLY, U.N.O.)
TOP OF EXT. FTG. EL. = -1'-4" (TYP. U.N.O.)
F# DENOTES FOOTING TYPE. REFERENCE SCHEDULE ON SHEET S1.0
$ DENOTES FOOTING STEP, REFERENCE SHEET S3.0 FOR DETAIL
T/F DENOTES TOP OF FOOTING ELEVATION
REFER TO S3.0 FOR BASE PLATE & ANCHOR BOLT DETAILS
DENOTES SCOPE BY TENANT
BP# DENOTES BASE PLATE TYPE. REFERENCE S3.0 FOR DETAILS.

NOTES
1. METAL STAIRS BY SUPPLIER

NARRAMORE ASSOCIATES, INC.
Architects & Planners
AMERICAN INSTITUTE OF ARCHITECTS
P.O. Box 8438 Greenville, SC 29604
310 Mills Ave. Greenville, SC 29605
Phone: 864.242.9881
Fax: 864.232.5202
plans@narramore-architects.com

©2014, NARRAMORE ASSOCIATES, INC.
COPYRIGHT PROTECTED BY FEDERAL LAW

SEAL
SOUTH CAROLINA REGISTERED ARCHITECT No. 20920 STEVEN C. DOFER
3/11/14

Blanchard & Calhoun COMMERCIAL
2743 PERIMETER PKWY
BLDG 100 STE 370
AUGUSTA, GA 30909

THE POSEIDON - BLDG. 121
24 SHELTER COVE LANE
HWY. 278, MILE MARKER 8
HILTON HEAD ISLAND, SC 29928

REVISIONS
1 02-06-14
2 02-17-14
4 03-10-14

DOCUMENT DATA
BUILDING 121
PROJECT NUMBER
13914
ISSUE DATE
12-08-13

BRITT PETERS AND ASSOCIATES INC.
consulting engineers
101 W. Camperdown Way
Suite 601
Greenville, SC 29601
(864) 271-8869
Fax (864) 233-5140
www.brittpeters.com
BPA Job No. 13421

SOUTH CAROLINA Britt, Peters & Associates, Inc. No. C00781 CERTIFICATE OF AUTHORIZATION

SHELTER COVE
BLDG 121

S1.0

FOUNDATION PLAN

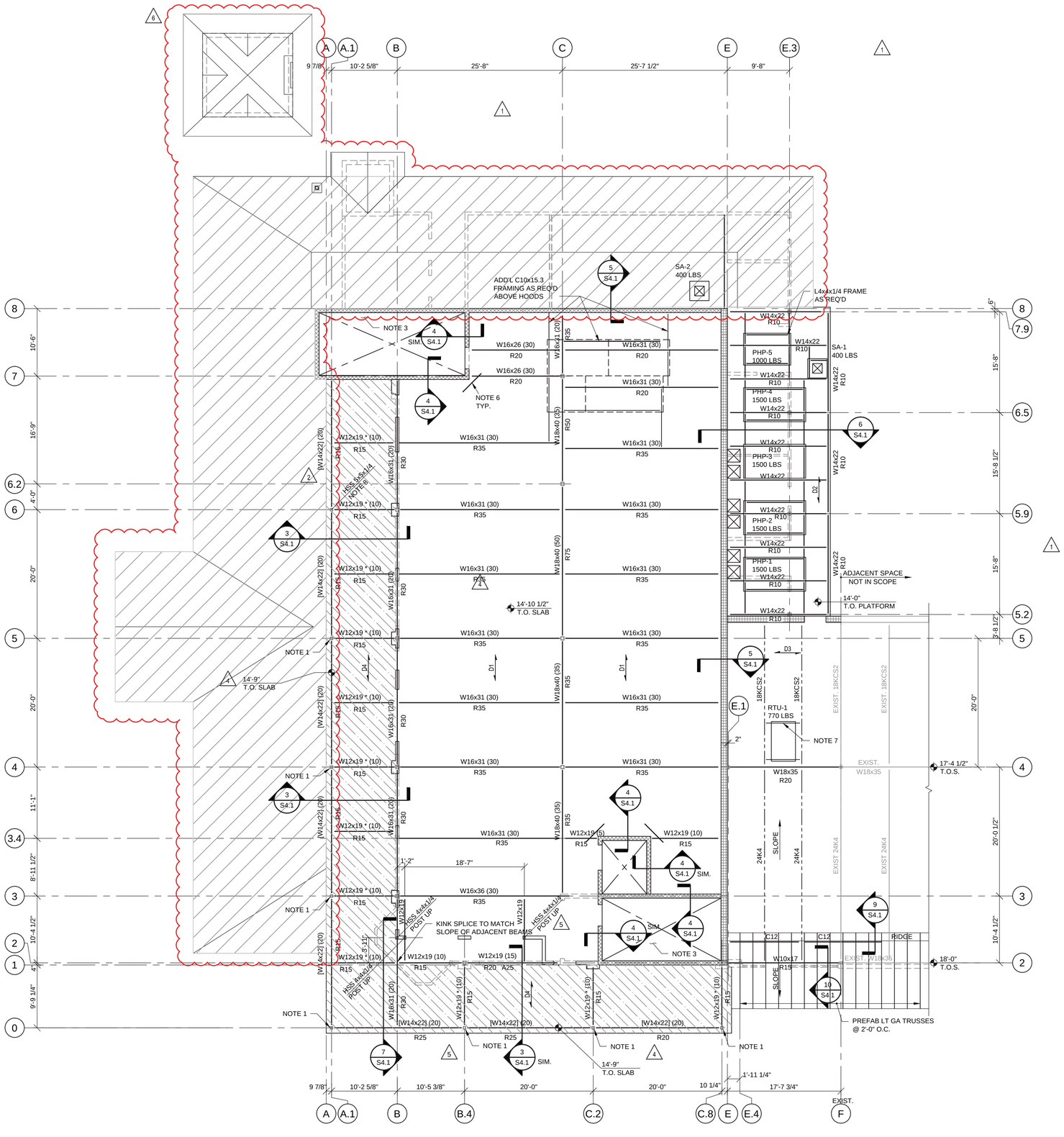

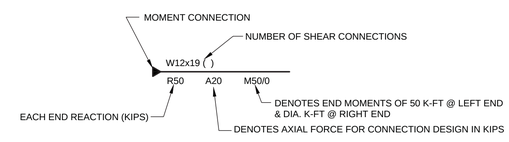

NOTE: LOADS SHOWN ARE FACTORED LOADS

SECOND FLOOR FRAMING PLAN

SCALE: 1/8"=1'-0"

DENOTES SPAN DIRECTION OF METAL DECK
DENOTES SCOPE BY TENANT

SLOPE TOP OF SLAB TO DRAIN. SEE ARCHITECTURAL.

D1 DENOTES 3" NWT CONCRETE ON 3" VLI 20 GA COMPOSITE METAL DECK REINF. W/ 6x6-W2.1xW2.1 WWR
D2 DENOTES BAR GRATING GW 150A SMOOTH, GALV., WELDED, 1 1/2"x1/8" @ 1 3/16" O.C. CROSS BARS AT 4" O.C.
D3 DENOTES SPAN DIRECTION OF 1 1/2-22 GA. METAL ROOF DECK. REFER TO TYPICAL DETAILS FOR CONNECTION.
D4 DENOTES 4 1/2" NWT CONCRETE ON 3" VLI 20 GA COMPOSITE METAL DECK REINF. W/ 6x6-W2.1xW2.1 WWR
* DENOTES SLOPE STEEL BEAMS

NOTES

1. REFER TO TENANT DRAWINGS FOR COLUMN ABOVE SECOND FLOOR.
2. TYPICAL TOP OF STEEL EL. = 14'-4 1/2". BEAMS WITH [ ] HAVE TOP OF STEEL EL. = 14'-3".
3. METAL STAIRS BY SUPPLIER.
4. REFER TO S3.1 FOR STEEL BEAM CMU POCKET CONNECTIONS
5. PROVIDE ADDITIONAL SLAB STEEL REINFORCEMENT OVER INTERIOR GIRDERS PER DETAIL ON S3.2.
6. #4 X 4'-0" LONG REBAR AT RE-ENTRANT CORNER.
7. REFER TO DETAIL 12/S4.1 FOR ROOF TOP CURB SUPPORT FRAME. REINFORCE JOIST FOR CONCENTRATED LOAD AS REQ'D PER DETAIL 11/S4.1.
8. COLUMN BY LANDLORD.
9. PROVIDE C6x10.5 AT EACH JAMB OF OVERHEAD DOOR AND MAN DOOR OPENINGS. CONNECT CHANNEL TO SLAB AND HSS GIRT SIMILAR TO DETAIL 7/S4.0 (UN0).

BRITT PETERS AND ASSOCIATES INC.
consulting engineers
101 W. Camperdown Way
Suite 601
Greenville, SC 29601
(864) 271-8869
Fax (864) 233-5140
www.brittpeters.com
BPA Job No. 13421

Britt, Peters & Associates, Inc. No. C00781 — CERTIFICATE OF AUTHORIZATION — SOUTH CAROLINA

NARRAMORE ASSOCIATES, INC.
Architects & Planners
AMERICAN INSTITUTE OF ARCHITECTS
P.O. Box 8438 Greenville, SC 29604
310 Mills Ave. Greenville, SC 29605
Phone: 864.242.9881
Fax: 864.232.5202
plans@narramore-architects.com

©2014, NARRAMORE ASSOCIATES, INC.
COPYRIGHT PROTECTED BY FEDERAL LAW

SEAL
SOUTH CAROLINA No. 20920 4-17-14 STEVEN C. DOVER

Blanchard & Calhoun COMMERCIAL
2743 PERIMETER PKWY
BLDG 100 STE 370
AUGUSTA, GA 30909

THE POSEIDON - BLDG. 121
24 SHELTER COVE LANE
HWY. 278, MILE MARKER 8
HILTON HEAD ISLAND, SC 29928

REVISIONS

1	02-06-14
2	02-17-14
4	03-10-14
5	03-27-14
6	04-14-14

DOCUMENT DATA
BUILDING 121
PROJECT NUMBER
13914
ISSUE DATE
12-08-13

SHELTER COVE
BLDG 121

S1.1

SECOND FLOOR
FRAMING PLAN

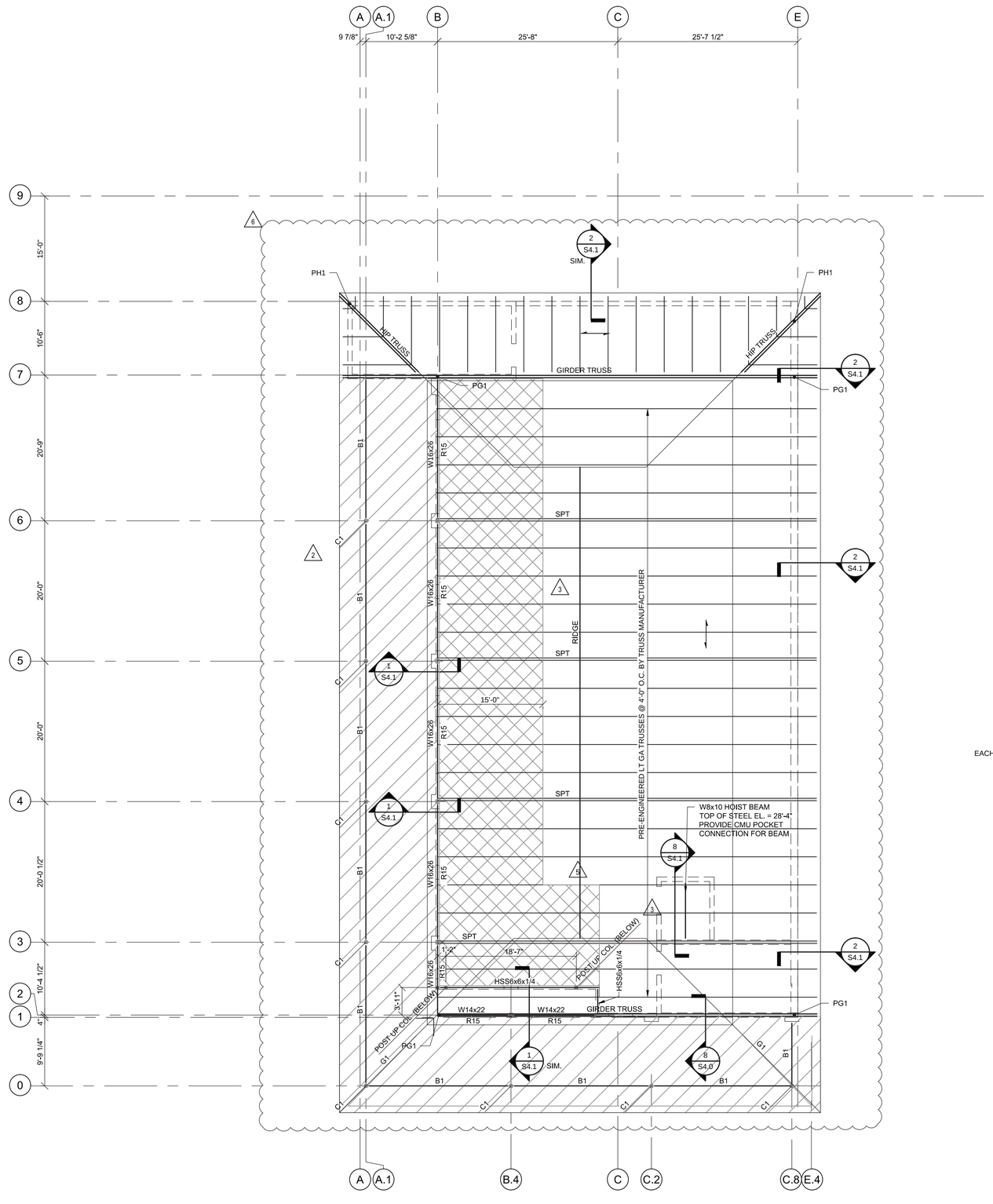

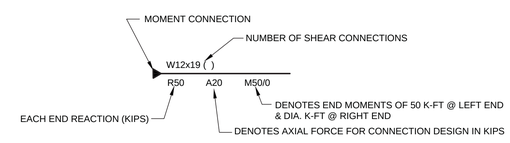

NOTE: LOADS SHOWN ARE FACTORED LOADS

ROOF FRAMING PLAN

SCALE: 1/8"=1'-0"

5 — DENOTES AREA WHERE TRUSS BOTTOM CHORD SHALL BE DESIGNED FOR ADD'L. 15 PSF LIVE LOAD FROM OVERHEAD DOORS IN OPEN POSITION. GC TO COORDINATE LOCATION OF OVERHEAD DOOR HANGERS WITH TRUSS SUPPLIER.

DENOTES SCOPE BY TENANT

DENOTES SPAN DIRECTION OF 1 1/2-22 GA. METL ROOF DECK. REFER TO TYPICAL DETAILS FOR CONNECTION.

C1 DENOTES COLUMN BY TENANT
B1 DENOTES BEAM BY TENANT
6 G1 DENOTES HIP BEAM BY TENANT
SPT DENOTES SPECIAL TRUSS LOADING: BOTTOM CHORD SHALL BE DESIGNED TO ACCEPT AND TRANSFER A +/- 9.0 KIP SERVICE AXIAL WIND LOAD UP TO THE METAL DECK DIAPHRAGM.
PH1 SERVICE WIND UPLIFT LOAD AT HIP TRUSS 9.0 KIPS
6 PG1 SERVICE WIND UPLIFT LOAD AT GIRDER TRUSS 12.0 KIPS

NOTES:
1. REFER TO S3.1 FOR STEEL BEAM CMU POCKET CONNECTIONS AND DETAILS.
3 2. NOT USED.
2 6 3. TRUSS BEARING ELEV = +27'-4"

NARRAMORE ASSOCIATES, INC.
Architects & Planners
AMERICAN INSTITUTE OF ARCHITECTS
P.O. Box 8438 Greenville, SC 29604
310 Mills Ave. Greenville, SC 29605
Phone: 864.242.9881
Fax: 864.232.5202
plans@narramore-architects.com

©2014, NARRAMORE ASSOCIATES, INC.
COPYRIGHT PROTECTED BY FEDERAL LAW

SEAL
SOUTH CAROLINA No. 20020 4-17-14 STEVEN C. DOVER

Blanchard & Calhoun COMMERCIAL
2743 PERIMETER PKWY
BLDG 100 STE 370
AUGUSTA, GA 30909

THE POSEIDON - BLDG. 121
24 SHELTER COVE LANE
HWY. 278, MILE MARKER 8
HILTON HEAD ISLAND, SC 29928

REVISIONS
2 02-17-14
3 02-25-14
5 03-27-14
6 04-14-14

Britt, Peters & Associates, Inc. No. C00781 SOUTH CAROLINA CERTIFICATE OF AUTHORIZATION

DOCUMENT DATA
BUILDING 121
PROJECT NUMBER
13914
ISSUE DATE
12-08-13

BRITT PETERS AND ASSOCIATES INC.
consulting engineers
101 W. Camperdown Way
Suite 601
Greenville, SC 29601
(864) 271-8869
Fax (864) 233-5140
www.brittpeters.com
BPA Job No. 13421

SHELTER COVE
BLDG 121

S1.2

ROOF FRAMING PLAN

VERIFICATION AND INSPECTION	FREQUENCY OF INSPECTION		REFERENCED STANDARD	IBC REFERENCE
	CONTINUOUS	PERIODIC		
STEEL CONSTRUCTION			AISC 360	1705.2
1. FABRICATOR AND ERECTOR DOCUMENTS	-	-	AISC 360, N3	
2. MATERIAL VERIFICATION OF STRUCTURAL STEEL				
A. IDENTIFICATION MARKINGS TO CONFORM TO ASTM STANDARDS SPECIFIED IN THE APPROVED CONSTRUCTION DOCUMENTS	-	X	AISC 360, A3	
B. MANUFACTURER'S CERTIFIED MILL TEST REPORTS	-	X	AISC 360, A3	
3. EMBEDMENTS	-	X		1705.3
4. VERIFY MEMBER LOCATIONS, BRACES, STIFFENERS, AND APPLICATION OF JOINT DETAILS AT EACH CONNECTION COMPLY WITH CONSTRUCTION DOCUMENTS	-	X		
5. STRUCTURAL STEEL WELDING				
A. INSPECTION TASKS PRIOR TO WELDING	-	X	AISC 360, N5.4	
B. INSPECTION TASKS DURING TO WELDING	-	X	AISC 360, N5.4	
C. INSPECTION TASKS AFTER TO WELDING	-	X	AISC 360, N5.4	
6. STRUCTURAL STEEL BOLTING				
A. INSPECTION TASKS PRIOR TO BOLTING	-	X	AISC 360, N5.6	
B. INSPECTION TASKS DURING TO BOLTING	-	X	AISC 360, N5.6	
C. INSPECTION TASKS AFTER TO BOLTING	-	X	AISC 360, N5.6	
7. COMPOSITE CONSTRUCTION	-	X	AISC 360, N6	
STEEL CONSTRUCTION OTHER THAN STRUCTURAL STEEL				1705.2.2
1. MATERIAL VERIFICATION OF COLD-FORMED STEEL DECK				
A. IDENTIFICATION MARKINGS TO CONFORM TO ASTM STANDARDS SPECIFIED IN THE APPROVED CONSTRUCTION DOCUMENTS	-	X	APPLICABLE ASTM MATERIAL STANDARDS	
B. MANUFACTURER'S CERTIFIED TEST REPORTS	-	X		
2. CONNECTION OF COLD-FORMED STEEL DECK TO SUPPORTING STRUCTURE				1705.2.2.1.1
A. WELDING	-	X	AWS D1.3	
B. OTHER FASTENERS	-	X	AISC 360, N6	
3. REINFORCING STEEL				1705.2.2.1.2
A. VERIFICATION OF WELDABILITY OF REINFORCING STEEL OTHER THAN ASTM A706	-	-	AWS D.1, ACI 318: SECTION 3.5.2	
B. REINFORCING STEEL RESISTING FLEXURAL AND AXIAL FORCES IN INTERMEDIATE AND SPECIAL MOMENT FRAMES, BOUNDARY ELEMENTS OF SPECIAL CONCRETE STRUCTURAL WALLS AND SHEAR REINFORCEMENT	-	-		
C. SHEAR REINFORCEMENT	-	-		
D. OTHER REINFORCING STEEL	-	X		
4. COLD-FORMED STEEL TRUSSES SPANNING 60 FEET OR GREATER				
A. VERIFY TEMPORARY AND PERMANENT RESTRAINT/BRACING ARE INSTALLED IN ACCORDANCE WITH THE APPROVED TRUSS SUBMITTAL PACKAGE	-	X		1705.2.2.2
CONCRETE CONSTUCTION			ACI 318	1705.3
1. INSPECTION OF REINFORCING STEEL, INCLUDING PRESTRESSING TENDONS, AND PLACEMENT.	-	X	ACI 318: 3.5, 7.1-7.7	1910.4
2. INSPECTION OF REINFORCING STEEL WELDING IN ACCORDANCE WITH TABLE 1705.2.2, ITEM 2B.	-	-	AWS D1.4, ACI 318: 3.5.2	
3. INSPECTION OF ANCHORS CAST IN CONCRETE WHERE ALLOWABLE LOADS HAVE BEEN INCREASED OR WHERE STRENGTH DESIGN IS USED.	-	X	ACI 318: 8.1.3, 21.2.8	1908.5, 1909.1
4. INSPECTION OF ANCHORS POST-INSTALLED IN HARDENED CONCRETE MEMBERS	-	X	ACI 318: 3.8.6, 8.1.3, 21.2.8	1909.1
5. VERIFYING USE OF REQUIRED DESIGN MIX.	-	X	ACI 318: CH. 4, 5.2-5.4	1904.2, 1910.2, 1910.3
6. AT THE TIME FRESH CONCRETE IS SAMPLED TO FABRICATE SPECIMENS FOR STRENGTH TESTS, PERFORM SLUMP AND AIR CONTENT TEST, AND DETERMINE THE TEMPERATURE OF THE CONCRETE	X	-	ASTM C 172, ASTM C 31, ACI 318: 5.6, 5.8	1910.10
7. INSPECTION OF CONCRETE AND SHOTCRETE PLACEMENT FOR PROPER APPLICATION TECHNIQUES	X	-	ACI 318: 5.9, 5.10	1910.6, 1910.7, 1910.8
8. INSPECTION FOR MAINTENANCE OF SPECIFIED CURING TEMPERATURE AND TECHNIQUES	-	X	ACI 318: 5.11-5.13	1910.9
9. INSPECTION OF PRESTRESSED CONCRETE				
A. APPLICATION OF PRESTRESSING FORCES	-	-	ACI 318: 18.20	
B. GROUTING OF BONDED PRESTRESSING TENDONS IN THE SEISMIC FORCE-RESISTING SYSTEM	-	-	ACI 318: 18.18.4	
10. ERECTION OF PRECAST CONCRETE MEMBERS.	-	-	ACI 318: CH. 16	
11. VERIFICATION OF IN-SITU CONCRETE STRENGTH, PRIOR TO STRESSING OF TENDONS IN POST-TENSIONED CONCRETE AND PRIOR TO REMOVAL OF SHORES AND FORMS FROM BEAMS AND STRUCTURAL SLABS.	-	-	ACI 318: 6.2	
12. INSPECT FORMWORK FOR SHAPE, LOCATION, AND DIMENSIONS OF THE CONCRETE MEMBER BEING FORMED	-	X	ACI 318: 6.1.1	
MASONRY CONSTRUCTION			TMS 402/ACI 530/ASCE 5 AND TMS 602/ACI 530.1/ASCE 6	1705.4
LEVEL B QUALITY ASSURANCE			TABLE 1.19.2	
1. VERIFICATION OF F'M AND F'AAC PRIOR TO CONSTRUCTION	-	X		
2. VERIFICATION OF SLUMP FLOW AND VISUAL STABILITY INDEX (VSI) OF SELF-CONSOLIDATING GROUT AS DELIVERED TO THE PROJECT	X	-		
3. VERIFY COMPLIANCE WITH THE APPROVED SUBMITTALS	-	X		
4. VERIFY PROPORTIONS OF SITE-MIXED MORTAR, GROUT AND PRESTRESSING GROUT FOR BONDED TENDONS	-	X		
5. VERIFY GRADE, TYPE, AND SIZE OF REINFORCEMENT AND ANCHOR BOLTS, AND PRESTRESSING TENDONS AND ANCHORAGES	-	X		
6. VERIFY CONSTRUCTION OF MORTAR JOINTS	-	X		
7. VERIFY PLACEMENT OF REINFORCEMENT, CONNECTORS, AND PRESTRESSING TENDONS AND ANCHORAGES	-	X		
8. VERIFY GROUT SPACE PRIOR TO GROUTING	-	X		
9. VERIFY PLACEMENT OF GROUT AND PRESTRESSING GROUT FOR BONDED TENDONS	X	-		
10. VERIFY SIZE AND LOCATION OF STRUCTURAL MASONRY ELEMENTS	-	X		
11. VERIFY TYPE, SIZE, AND LOCATION OF ANCHORS, INCLUDING DETAILS OF ANCHORAGE OF MASONRY TO STRUCTURAL MEMBERS, FRAMES, OR OTHER CONSTRUCTION.	-	X		
12. VERIFY WELDING OF REINFORCEMENT (SEE 1705.2.2)	-	-		
13. VERIFY PREPARATION, CONSTRUCTION, AND PROTECTION OF MASONRY DURING COLD WEATHER (TEMPERATURE BELOW 40OF) OR HOT WEATHER (TEMPERATURE ABOVE 90OF)	-	X		
14. VERIFY APPLICATION AND MEASUREMENT OF PRESTRESSING FORCE	-	-		
15. VERIFY PLACEMENT OF AAC MASONRY UNITS AND CONSTRUCTION OF THIN-BED MORTAR JOINTS (FIRST 5000 SF OF AAC MASONRY)	-	-		
16. VERIFY PLACEMENT OF AAC MASONRY UNITS AND CONSTRUCTION OF THIN-BED MORTAR JOINTS (AFTER THE FIRST 5000 SF OF AAC MASONRY)	-	-		
17. VERIFY PROPERTIES OF THIN-BED MORTAR FOR AAC MASONRY (FIRST 5000 SF OF AAC MASONRY)	-	-		
18. VERIFY PROPERTIES OF THIN-BED MORTAR FORAAC MASONRY (AFTER THE FIRST 5000 SF OF AAC MASONRY)	-	-		
19. PREPARE GROUT AND MORTAR SPECIMENS	-	X		
20. OBSERVE PREPARATION OF PRISMS	-	X		
SOILS				1705.6
1. VERIFY MATERIALS BELOW SHALLOW FOUNDATIONS ARE ADEQUATE TO ACHIEVE THE DESIGN BEARING CAPACITY.	-	X		
2. VERIFY EXCAVATIONS ARE EXTENDED TO PROPER DEPTH AND HAVE REACHED PROPER MATERIAL.	-	X		
3. PERFORM CLASSIFICATION AND TESTING OF CONTROLLED FILL MATERIALS.	-	X		
4. VERIFY USE OF PROPER MATERIALS, DENSITIES, AND LIFT THICKNESSES DURING PLACEMENT AND COMPACTION OF CONTROLLED FILL	X	-		
5. PRIOR TO PLACEMENT OF CONTROLLED FILL, OBSERVE SUBGRADE AND VERIFY THAT SITE HAS BEEN PREPARED PROPERLY	-	X		

NARRAMORE ASSOCIATES, INC.
Architects & Planners
AMERICAN INSTITUTE OF ARCHITECTS

P.O. Box 8438 Greenville, SC 29604
310 Mills Ave. Greenville, SC 29605

Phone: 864.242.9881
Fax: 864.232.5202

plans@narramore-architects.com

©2014, NARRAMORE ASSOCIATES, INC.
COPYRIGHT PROTECTED BY FEDERAL LAW

SEAL

SOUTH CAROLINA REGISTERED No. 20920 STEVEN C. DOWER

Blanchard & Calhoun COMMERCIAL

2743 PERIMETER PKWY
BLDG 100 STE 370
AUGUSTA, GA 30909

THE POSEIDON - BLDG. 121

24 SHELTER COVE LANE
HWY. 278, MILE MARKER 8
HILTON HEAD ISLAND, SC 29928

REVISIONS

SOUTH CAROLINA Britt, Peters & Associates, Inc. No. C00781 CERTIFICATE OF AUTHORIZATION

DOCUMENT DATA
BUILDING 121

PROJECT NUMBER
13914

ISSUE DATE
12-08-13

BRITT PETERS AND ASSOCIATES INC.
consulting engineers
101 W. Camperdown Way
Suite 601
Greenville, SC 29601
(864) 271-8869
Fax (864) 233-5140
www.brittpeters.com
BPA Job No. 13421

SHELTER COVE
BLDG 121

S2.0

SPECIAL INSPECTIONS

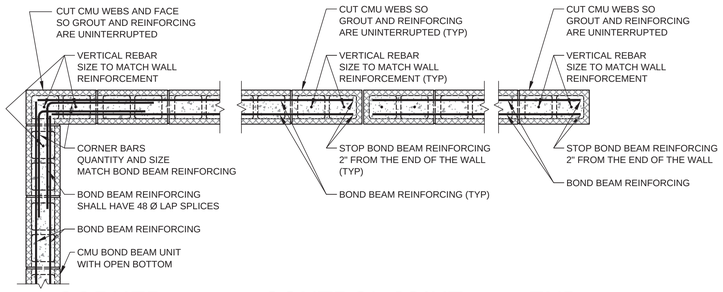

CORNER CONTROL JOINT END

BOND BEAM DETAILS

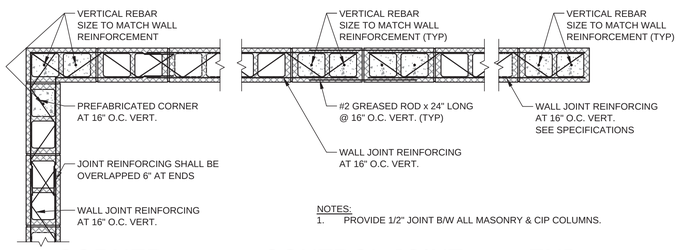

NOTES:
1. PROVIDE 1/2" JOINT B/W ALL MASONRY & CIP COLUMNS.

CORNER CONTROL JOINT END

JOINT REINFORCEMENT DETAILS

STRUCTURAL MASONRY WALL DETAILS

UNLESS INDICATED OTHERWISE ON THE STRUCTURAL DRAWINGS

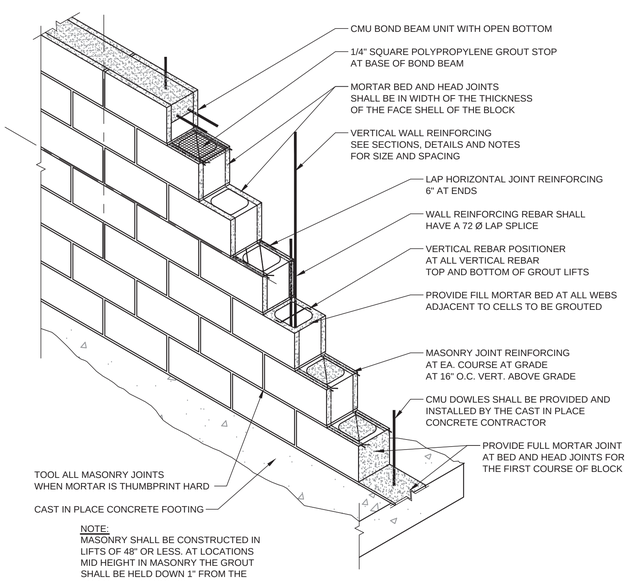

NOTE:
MASONRY SHALL BE CONSTRUCTED IN LIFTS OF 48" OR LESS. AT LOCATIONS MID HEIGHT IN MASONRY THE GROUT SHALL BE HELD DOWN 1" FROM THE TOP OF THE MASONRY.

WALL CONSTRUCTION

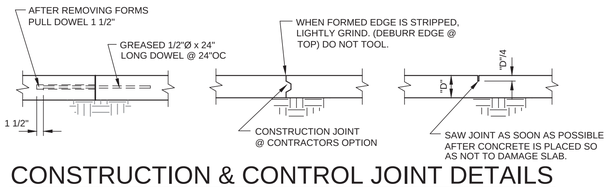

CONSTRUCTION & CONTROL JOINT DETAILS

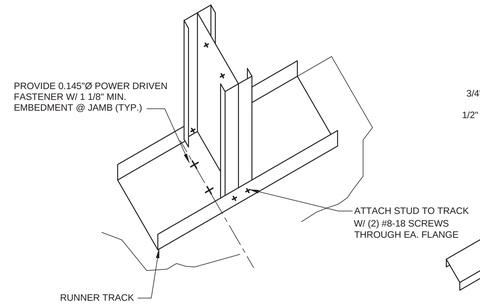

ANCHORAGE AT JAMBS

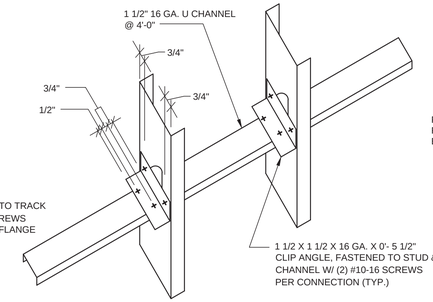

LATERAL BRIDGING

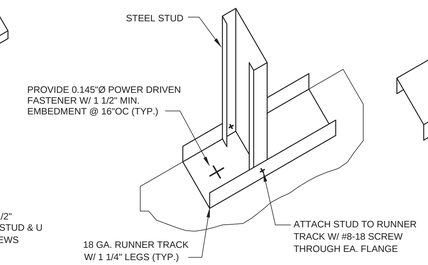

RUNNER TRACK ANCHORAGE

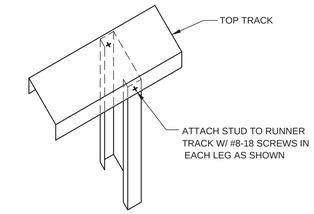

STUD TO TOP TRACK CONNECTION

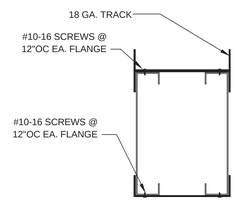

BOXED HEADER DETAIL

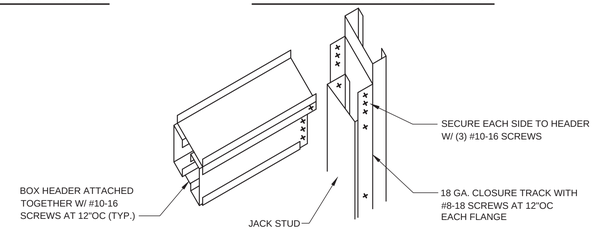

HEADER BOX CONNECTION

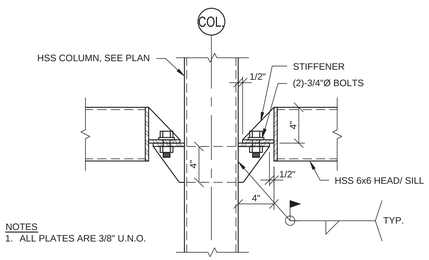

NOTES
1. ALL PLATES ARE 3/8" U.N.O.

TYP. HSS HEAD/ SILL TO COLUMN CONNECTION

SCALE: 1 1/2"=1'-0"

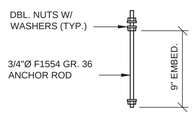

TYP. ANCHOR ROD DETAIL

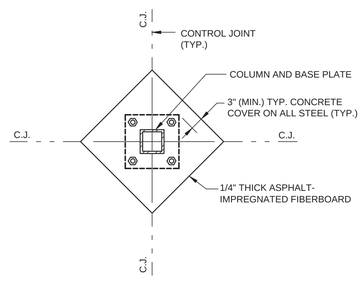

TYP. COL. ISOLATION JOINT

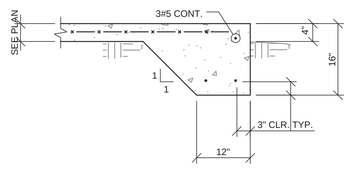

TYPICAL TURNDOWN DETAIL

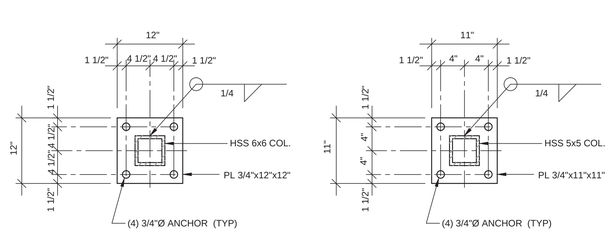

BP1 BP2

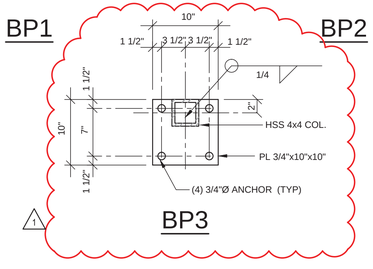

BP3

BASE PLATE DETAILS

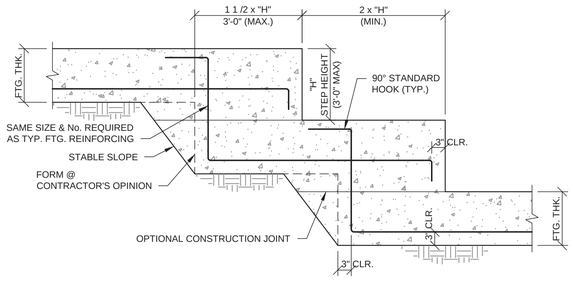

TYPICAL STEP FOOTING DETAIL

3/4" = 1'-0"

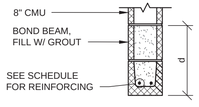

CMU LINTEL SCHEDULE		
SPAN	d = DEPTH	REINF.
≤ 4'-0"	8"	(2) #5
< 4'-0" ≤ 7'-0"	16"	(2) #5

MIN. 16" BEARING EACH END

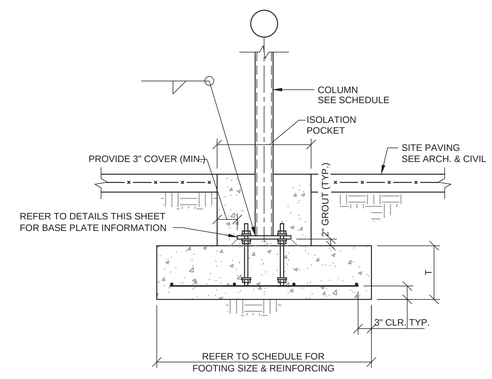

TYPICAL ISOLATION POCKET

NARRAMORE ASSOCIATES, INC.
Architects & Planners
AMERICAN INSTITUTE OF ARCHITECTS
P.O. Box 8438 Greenville, SC 29604
310 Mills Ave. Greenville, SC 29605
Phone: 864.242.9881
Fax: 864.232.5202
plans@narramore-architects.com

©2014, NARRAMORE ASSOCIATES, INC.
COPYRIGHT PROTECTED BY FEDERAL LAW

SEAL
SOUTH CAROLINA REGISTERED ARCHITECT No. 20920 STEVEN C. DOYER

Blanchard & Calhoun COMMERCIAL
2743 PERIMETER PKWY
BLDG 100 STE 370
AUGUSTA, GA 30909

THE POSEIDON - BLDG. 121
24 SHELTER COVE LANE
HWY. 278, MILE MARKER 8
HILTON HEAD ISLAND, SC 29928

REVISIONS
1 02-06-14

DOCUMENT DATA
BUILDING 121
PROJECT NUMBER
13914
ISSUE DATE
12-08-13

BRITT PETERS AND ASSOCIATES INC.
consulting engineers
101 W. Camperdown Way
Suite 601
Greenville, SC 29601
(864) 271-8869
Fax (864) 233-5140
www.brittpeters.com
BPA Job No. 13421

SOUTH CAROLINA Britt, Peters & Associates, Inc. No. C00781 CERTIFICATE OF AUTHORIZATION

SHELTER COVE BLDG 121

S3.0

TYPICAL DETAILS

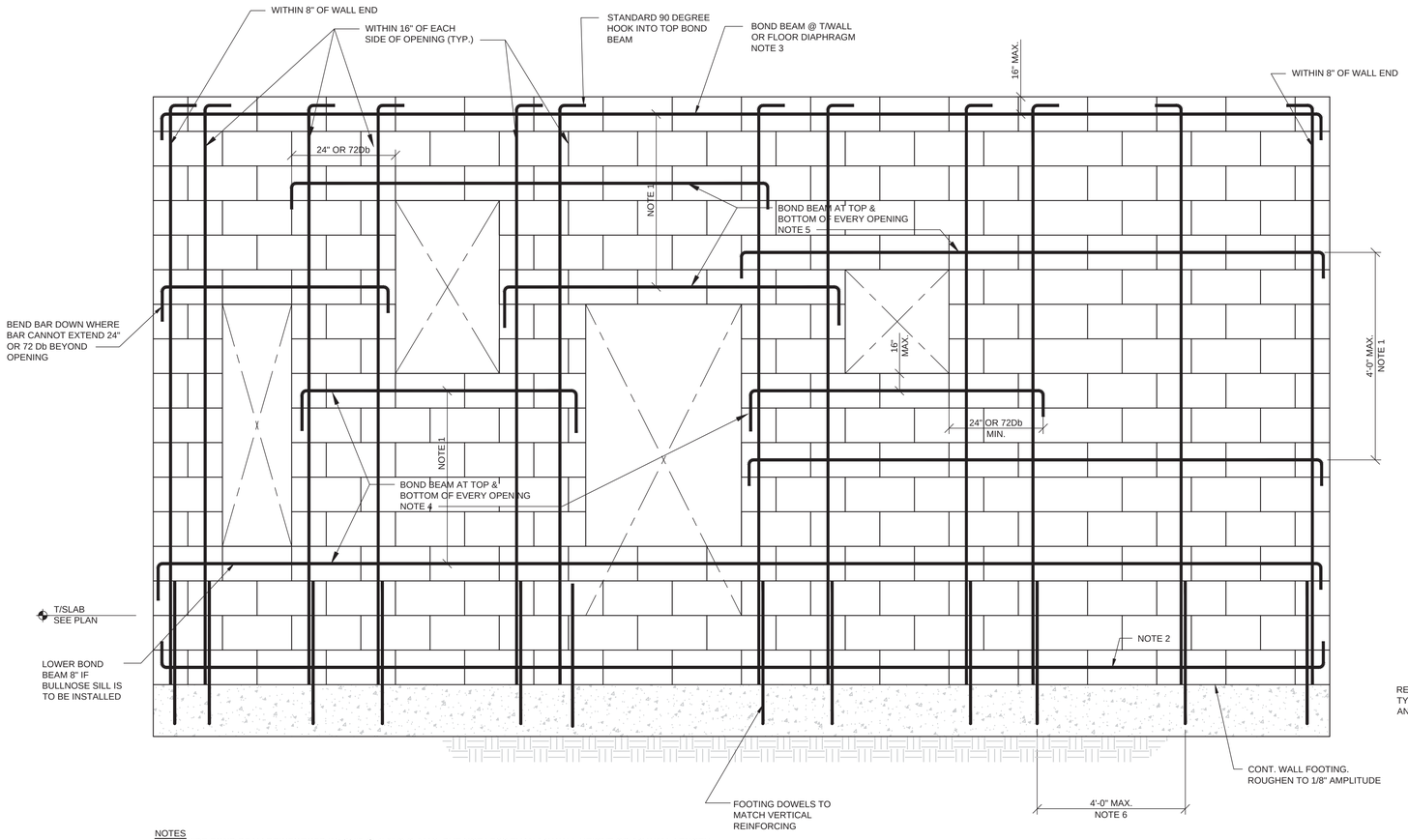

NOTES
1. PROVIDE BOND BEAM REINFORCED W/ (1)#5 @ 4'-0" O.C. MAX. BUT NOT LESS THAN 1/3 WALL HEIGHT OR 1/3 WALL LENGTH.
2. PROVIDE BOND BEAM REINFORCED W/ (1)#5 @ FIRST COURSE.
3. PROVIDE BOND BEAM REINFORCED W/ (1)#5 WITHIN 16" OF TOP OF WALL AND AT ALL FLOOR OR ROOF DIAGHRAGMS.
4. PROVIDE BOND BEAM REINFORCED W/ (1)#5 WITHIN 16" OF THE BOTTOM OF ALL OPENINGS GREATER THAN 16" SQ. EXTEND BARS THE GREATER OF 24" OR 72 Db BEYOND OPENINGS. PROVIDE STANDARD HOOK WHERE OPENING IS CLOSE TO WALL END OR CONTROL JOINT.
5. PROVIDE CMU LINTEL OVER ALL OPENINGS PER LINTEL SCHEDULE. EXTEND BARS THE GREATER OF 24" OR 72 Db BEYOND OPENINGS. PROVIDE STANDARD HOOK WHERE OPENING IS CLOSE TO WALL END OR CONTROL JOINT.
6. PROVIDE VERTICAL REINFORCING PER PLANS AND DETAILS. SPACING SHALL NOT EXCEED 3'-4" O.C. FOR #5 BARS OR 4'-0" FOR #6 BARS.
7. CONTROL JOINTS SHALL NOT BE USED IN SPECIAL REINFORCED MASONRY SHEARWALLS U.N.O.

MASONRY SHEAR WALL REINFORCING LAYOUT

NTS

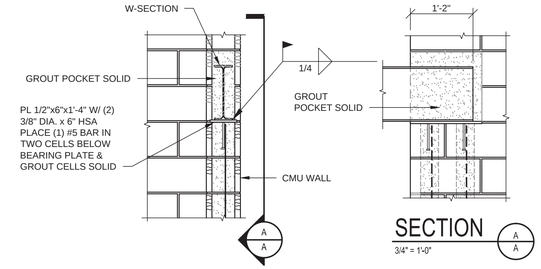

BEAM BEARING @ CORNER OF CMU

3/4" = 1'-0"

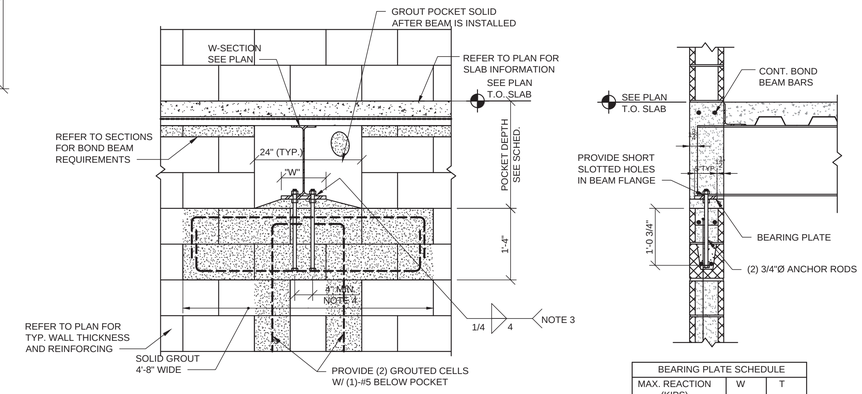

POCKET DEPTH	
BEAM SIZE	POCKET DEPTH
W16 AND SMALLER	24"
W18 TO W24	32"
W27 TO W30	40"

BEARING PLATE SCHEDULE		
MAX. REACTION (KIPS)	W	T
15	8"	3/4"
30	8"	3/4"
40	12"	1 1/4"
50	12"	1 1/4"
60	16"	1 3/4"
70	16"	1 3/4"

NOTES
1. ALL BEARING PLATES TO BE GALVANIZED.
2. PAINT 1'-0" LENGTH AT BEAM END W/ ZINC RICH PRIMER.
3. WELD NOT REQ'D WHERE SLAB IS PRESENT BOTH SIDES OF WALL & RODS EXTEND THROUGH BEAM FLANGE.
4. WHERE BEAM FLANGE IS LESS THAN 6", SPACE BOLTS OUTSIDE OF BEAM FLANGES AND INCREASE "W" AS NEEDED.

BEAM POCKET DETAIL

3/4" = 1'-0"

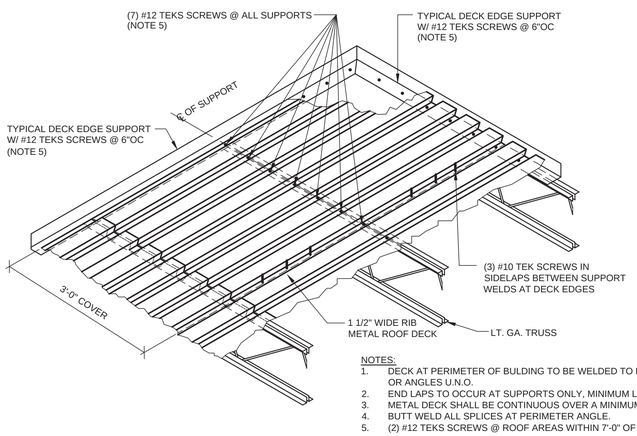

NOTES:
1. DECK AT PERIMETER OF BULDING TO BE WELDED TO BEAMS OR ANGLES U.N.O.
2. END LAPS TO OCCUR AT SUPPORTS ONLY, MINIMUM LAP = 2".
3. METAL DECK SHALL BE CONTINUOUS OVER A MINIMUM OF 2 SPANS.
4. BUTT WELD ALL SPLICES AT PERIMETER ANGLE.
5. (2) #12 TEKS SCREWS @ ROOF AREAS WITHIN 7'-0" OF ROOF EDGE.

TYPICAL 1 1/2" ROOF DECK FASTENING PATTERN

3/4" = 1'-0"

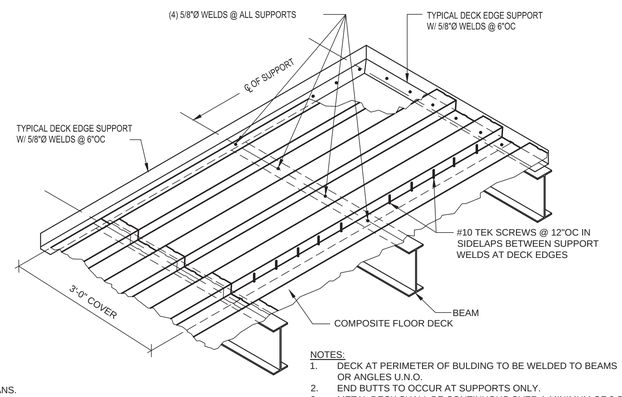

NOTES:
1. DECK AT PERIMETER OF BULDING TO BE WELDED TO BEAMS OR ANGLES U.N.O.
2. END BUTTS TO OCCUR AT SUPPORTS ONLY.
3. METAL DECK SHALL BE CONTINUOUS OVER A MINIMUM OF 2 SPANS.
4. BUTT WELD ALL SPLICES AT PERIMETER ANGLE.

FLOOR DECK FASTENING PATTERN

3/4" = 1'-0"

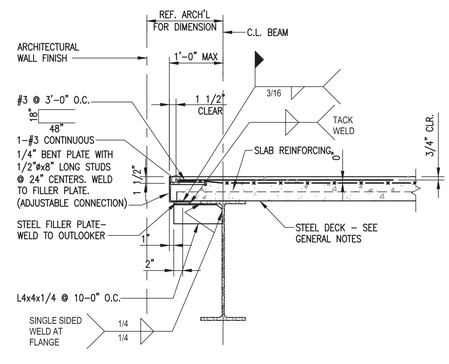

DETAIL

3/4" = 1'-0"

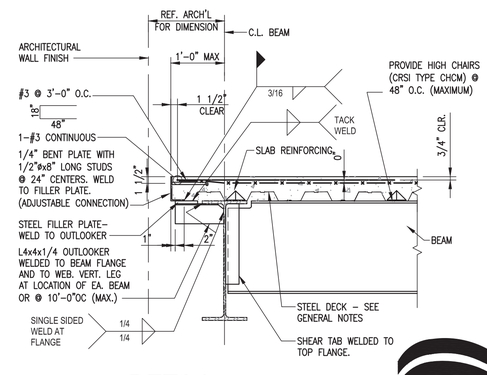

DETAIL

3/4" = 1'-0"

NARRAMORE ASSOCIATES, INC.
Architects & Planners
AMERICAN INSTITUTE OF ARCHITECTS
P.O. Box 8438 Greenville, SC 29604
310 Mills Ave. Greenville, SC 29605
Phone: 864.242.9881
Fax: 864.232.5202
plans@narramore-architects.com

©2014, NARRAMORE ASSOCIATES, INC.
COPYRIGHT PROTECTED BY FEDERAL LAW

SEAL
SOUTH CAROLINA
No. 20920
STEVEN C. DOVER

Blanchard & Calhoun COMMERCIAL
2743 PERIMETER PKWY
BLDG 100 STE 370
AUGUSTA, GA 30909

THE POSEIDON - BLDG. 121
24 SHELTER COVE LANE
HWY. 278, MILE MARKER 8
HILTON HEAD ISLAND, SC 29928

REVISIONS

DOCUMENT DATA
BUILDING 121
PROJECT NUMBER
13914
ISSUE DATE
12-08-13

BRITT PETERS AND ASSOCIATES INC.
consulting engineers
101 W. Camperdown Way
Suite 601
Greenville, SC 29601
(864) 271-8869
Fax (864) 233-5140
www.brittpeters.com
BPA Job No. 13421

SOUTH CAROLINA
Britt, Peters & Associates, Inc.
No. C00781
CERTIFICATE OF AUTHORIZATION

SHELTER COVE
BLDG 121

S3.1

TYPICAL DETAILS

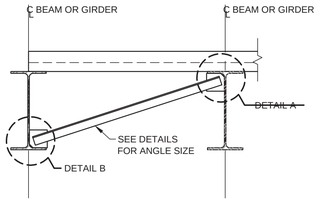

BRACE CONN. TO
BEAM TOP FLANGE

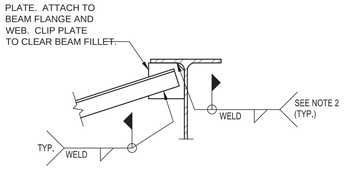

DETAIL A

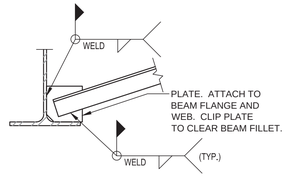

DETAIL B

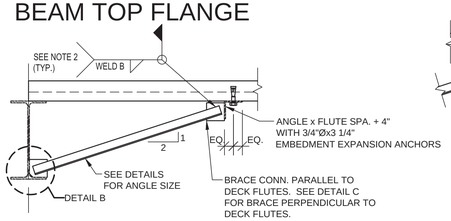

BRACE CONN. TO DECK

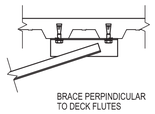

DETAIL C

BOTTOM FLANGE
BRACE TYP. DETAIL

3/4" = 1'-0"

SEE PLAN OR DETAILS FOR BRACE ANGLE SIZE. (L3x3x1/4 U.N.O.)				
BRACE ANGLE SIZE	PLATE	WELD	CONNECTION TO COMPOSITE SLAB	
			ANGLE SIZE	NUMBER OF ANCHORS
L3x3x1/4	1/4x4x4	3/16	L4x4x1/4	2
L4x4x1/4	1/4x5x5	3/16	L5x5x1/4	3
L5x5x5/16	3/8x6x6	1/4	NOT APPLICABLE	

NOTES:
1. SEE PLAN FOR LOCATIONS OF ANGLE BRACES.
2. IF NOT SHOWN ON PLAN OR DETAILS, BRACE SIZE SHALL BE L3x3x1/4.

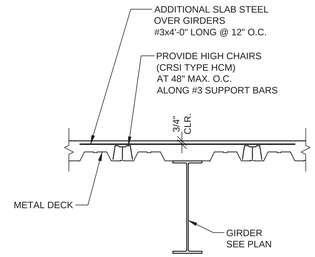

INTERIOR GIRDER

3/4"=1'-0"

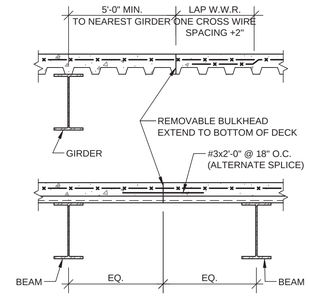

ELEVATED CONSTRUCTION JOINT DETAIL

NOTES:
1. CONSRUCTION JOINTS PARALLEL TO DECK FLUTES SHALL BE LOCATED NO CLOSER THAN 5'-0" FROM CENTERLINE OF THE NEAREST GIRDER.
2. CONSTRUCTION JOINTS PERPENDICULAR TO DECK FLUTES SAHLL BE LOCATED AT THE CENTER OF THE METAL DECK SPAN.
3. AT CONTRACTOR'S OPTION, PREFORMED PERMANENT METAL SHEAR KEY FOLLOWING CONTOUR OF METAL DECK FLUTES MAY BE USED WITH SLAB REINFORCEMENT STOPPING EACH SIDE AND #3 DOWELS x 2'-0" CENTERED AT 18" O.C.

ELEVATED CONSTRUCTION JOINT DETAIL

1 1/2"=1'-0"

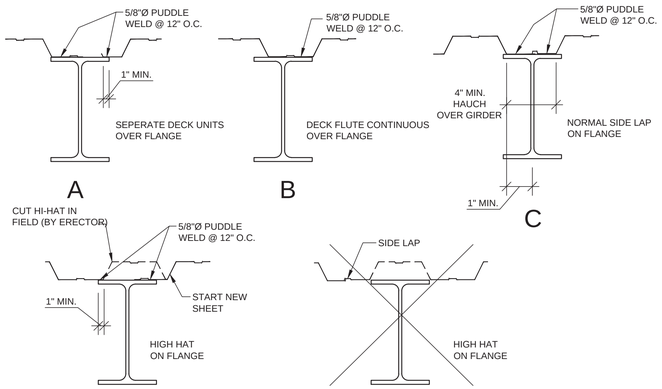

DETAIL

1 1/2"=1'-0"

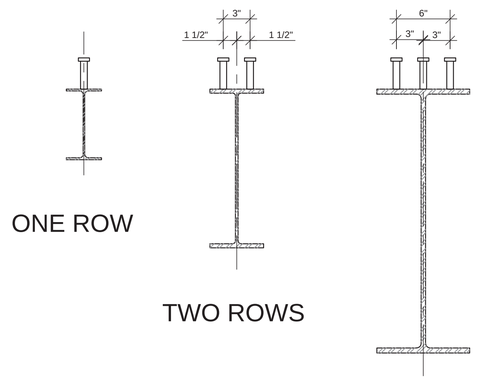

ONE ROW

TWO ROWS

THREE ROWS

NOTES:
1. SHEAR CONNECTORS IN ONE ROW SHALL BE PLACED DIRECTLY OVER THE BEAM WEB.
2. PLACE STUDS IN A SINGLE ROW WHERE SPACING REQUIREMENTS PERMIT. STUDS SHALL BE PLACED IN TWO ROWS OR THREE ROWS ONLY WHERE REQUIRED IN ORDER TO PLACE THE TOTAL NUMBER OF STUDS. SEE TYPICAL DETAIL, SHEAR CONNECTOR PLACEMENT DIAGRAMS.
3. PROVIDE MINIMUM 1" SPACING FROM EDGE OF FLANGE TO CENTERLINE OF STUD.
4. SUBMIT SHOP DRAWINGS SHOWING PLACEMENT OF SHEAR CONNECTORS FOR ENGINEER'S APPROVAL.
5. SEE GENERAL NOTES AND PLANS FOR STUD LENGTH.

DETAIL

1 1/2"=1'-0"

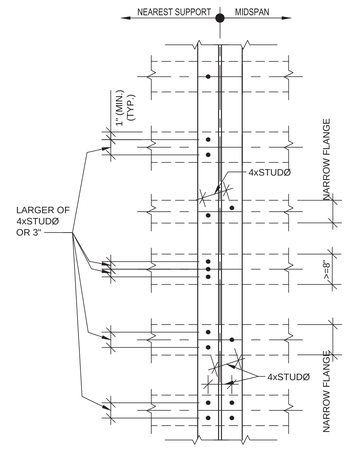

PLAN

DETAIL

3/4"=1'-0"

SECTION
SINGLE STUD
ORIENTATION

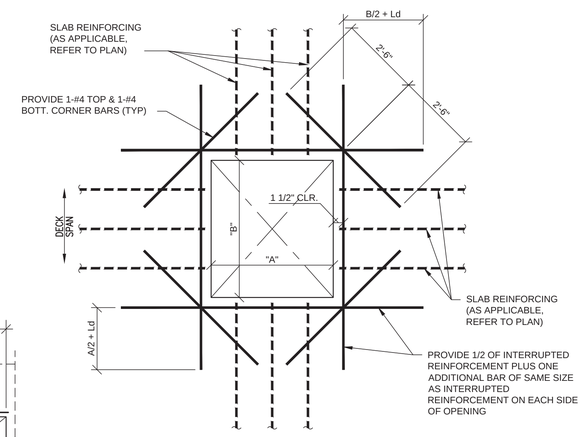

DETAIL

NTS

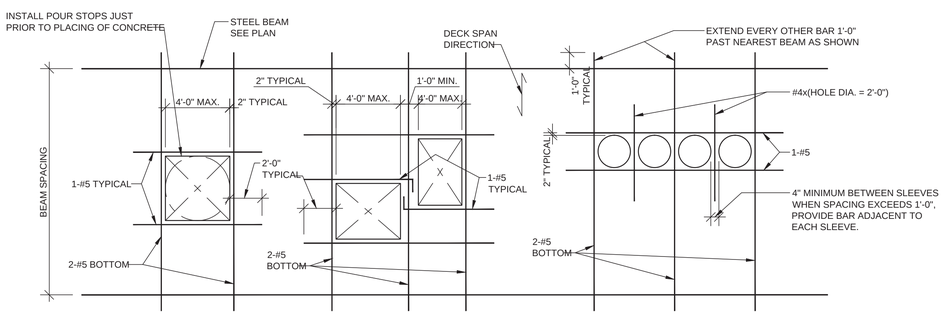

SINGLE OPENING MULTIPLE OPENINGS PIPE SLEEVES

NOTES:
1. COORDINATE OPENING SIZE AND LOCATION WITH ARCHITECTURAL AND MECHANICAL DRAWINGS.
2. MAXIMUM DIMENSION "A" SHALL BE 4'-0". REFER TO PLAN OR DETAIL ON DRAWINGS FOR FRAMING OF OPENINGS GREATER THAN 4'-0".
3. WWR SLAB REINFORCEMENT SHALL BE CUT AROUND SLAB OPENING. WWR SHALL EXTEND TO WITHIN 2" OF OPENING ON ALL SIDES.
4. OPENINGS 10" AND SMALLER DO NOT REQUIRE ADDITIONAL REINFORCEMENT.
5. FIELD CUT OPENINGS IN DECK AFTER CONCRETE SLAB HAS BEEN POURED AND HAS ATTAINED MINIMUM 75% OF ITS SPECIFIED 28 DAY COMPRESSIVE STRENGTH. DO NOT FIELD CUT METAL DECK UNTIL IMMEDIATELY BEFORE OPENING IS NEEDED.
6. REINFORCEMENT PERPENDICULAR TO DECK SPAN SHALL BE PLACED ON TOP OF DECK FLUTES.
7. REINFORCEMENT PARALLEL TO DECK SPAN SHALL BE PLACED IN THE LOWER FLUTE AND SHALL BECHAIR TO PROVED 3/4" COVER.
8. THIS DETAIL SHOWS TYPICAL CONDITIONS. VERIFY REINFORCING STEEL PLACEMENT WITH ENGINEER FOR SPECIAL CASES.
9. PROVIDE REINFORCEMENT AS SHOWN FOR SQUARE, RECTANGULAR OR ROUND OPENINGS.

REINF. @ SMALL FLOOR PENETRATIONS

NOT TO SCALE

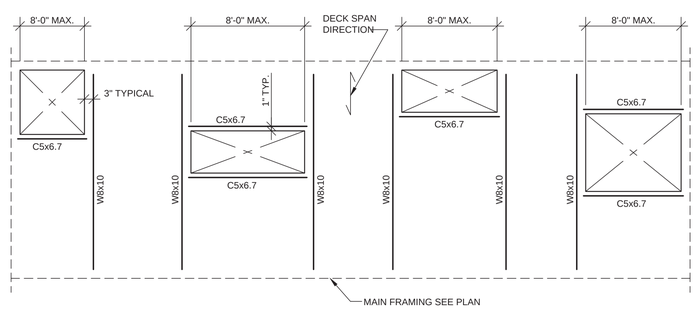

NOTES:
1. COORDINATE OPENING SIZE AND LOCATIONS WITH ARCHITECTURAL AND MECHANICAL DRAWINGS.
2. THIS DETAIL SHOWS TYPICAL OPENING CONFIGURATIONS. VERIFY FRAMING WITH ENGINEER FOR SPECIAL CASES.
3. DECK MANUFACTURER TO PROVIDE 14 GAGE METAL DECK EDGE CLOSURE AROUND EACH OPENING UNLESS DETAILED OTHERWISE.

FRAMING AT LARGE FLOOR PENETRATIONS

NOT TO SCALE

NARRAMORE
ASSOCIATES, INC.
Architects & Planners
AMERICAN INSTITUTE OF ARCHITECTS
P.O. Box 8438 Greenville, SC 29604
310 Mills Ave. Greenville, SC 29605
Phone: 864.242.9881
Fax: 864.232.5202
plans@narramore-architects.com

©2014, NARRAMORE ASSOCIATES, INC.
COPYRIGHT PROTECTED BY FEDERAL LAW

SEAL

SOUTH CAROLINA
REGISTERED
No. 20920
STEVEN C. DOVER

Blanchard & Calhoun
COMMERCIAL
2743 PERIMETER PKWY
BLDG 100 STE 370
AUGUSTA, GA 30909

THE POSEIDON - BLDG. 121

24 SHELTER COVE LANE
HWY. 278, MILE MARKER 8
HILTON HEAD ISLAND, SC 29928

REVISIONS

DOCUMENT DATA
BUILDING 121
PROJECT NUMBER
13914
ISSUE DATE
12-08-13

BRITT PETERS
AND
ASSOCIATES
INC.
consulting engineers
101 W. Camperdown Way
Suite 601
Greenville, SC 29601
(864) 271-8869
Fax (864) 233-5140
www.brittpeters.com
BPA Job No. 13421

SOUTH CAROLINA
Britt, Peters & Associates, Inc.
No. C00781
CERTIFICATE OF AUTHORIZATION

SHELTER COVE
BLDG 121

S3.2

TYPICAL DETAILS

NOTES
1. PROVIDE BUMPOUTS IN STRIP FOOTING WHERE REQ'D BY ARCH'L VENEER.

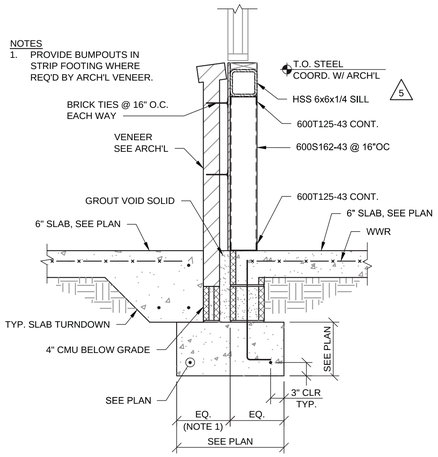

SECTION 1 / S4.0
3/4" = 1'-0"

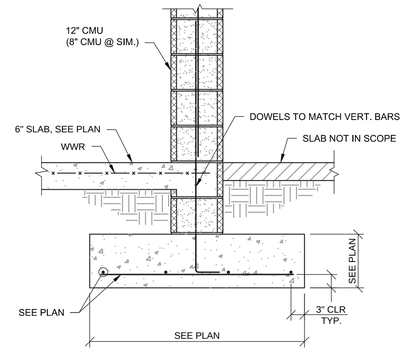

SECTION 2 / S4.0
3/4" = 1'-0"

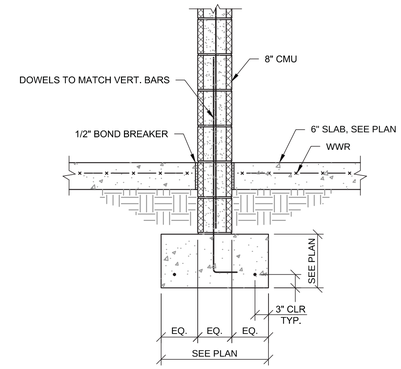

SECTION 3 / S4.0
3/4" = 1'-0"

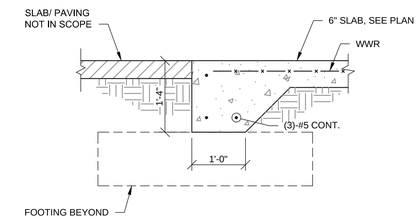

SECTION 4 / S4.0
3/4" = 1'-0"

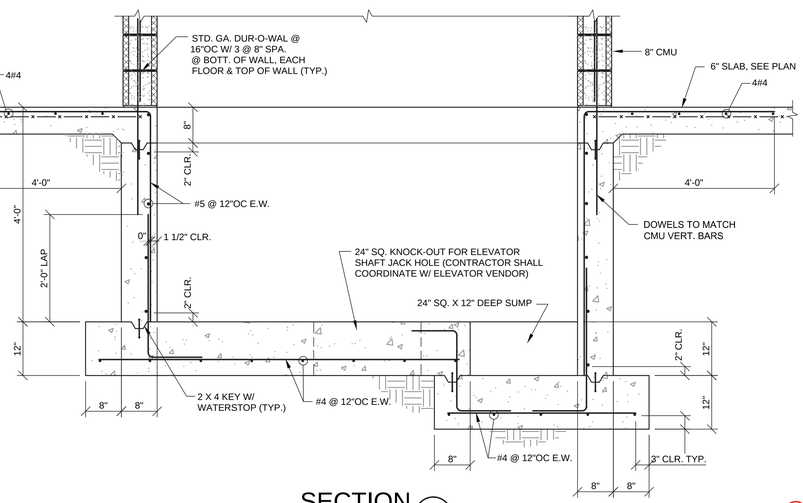

SECTION 5 / S4.0
3/4" = 1'-0"

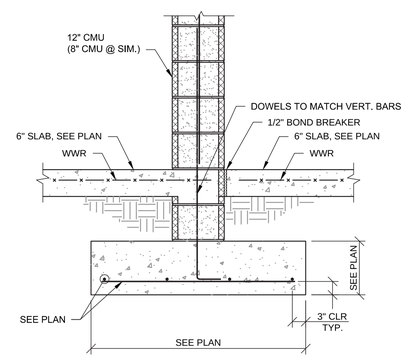

SECTION 6 / S4.0
3/4" = 1'-0"

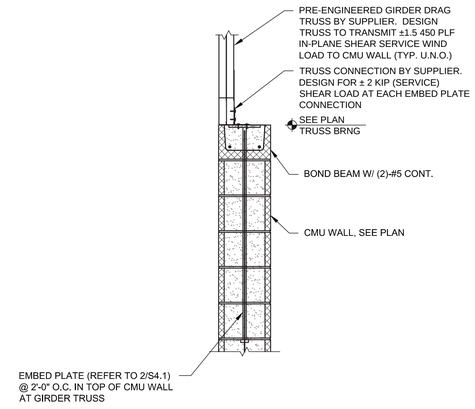

SECTION 8 / S4.0
3/4" = 1'-0"

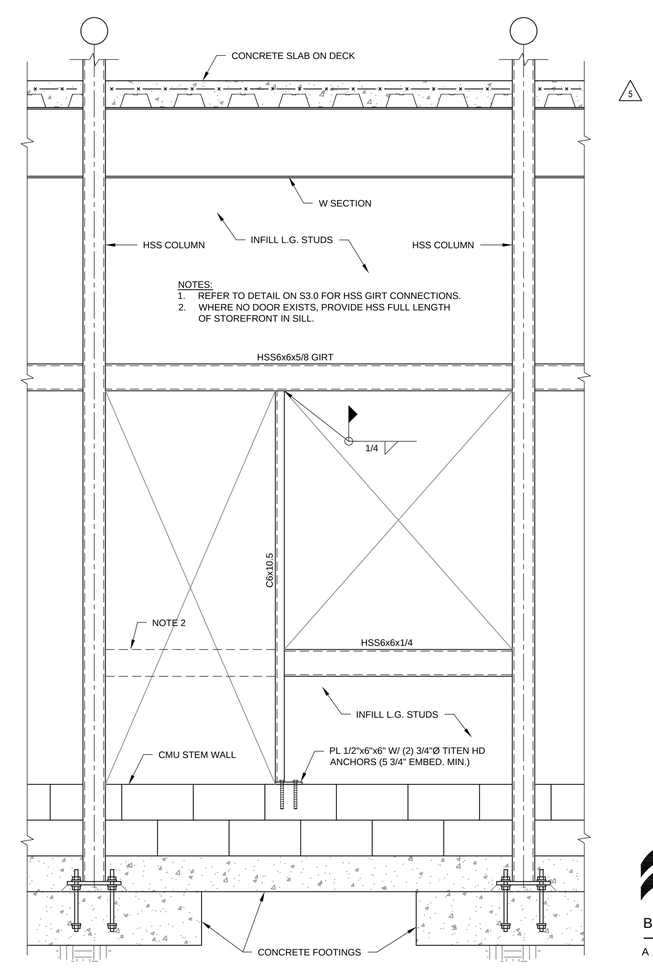

SECTION 7 / S4.0
3/4" = 1'-0"

NARRAMORE ASSOCIATES, INC.
Architects & Planners
AMERICAN INSTITUTE OF ARCHITECTS
P.O. Box 8438 Greenville, SC 29604
310 Mills Ave. Greenville, SC 29605
Phone: 864.242.9881
Fax: 864.232.5202
plans@narramore-architects.com

©2014, NARRAMORE ASSOCIATES, INC.
COPYRIGHT PROTECTED BY FEDERAL LAW

SEAL
SOUTH CAROLINA
No. 26920
4-17-14
STEVEN C. DOVER

Blanchard & Calhoun COMMERCIAL
2743 PERIMETER PKWY
BLDG 100 STE 370
AUGUSTA, GA 30909

THE POSEIDON - BLDG. 121
24 SHELTER COVE LANE
HWY. 278, MILE MARKER 8
HILTON HEAD ISLAND, SC 29928

REVISIONS
1 02-06-14
5 03-27-14
6 04-14-14

DOCUMENT DATA
BUILDING 121
PROJECT NUMBER
13914
ISSUE DATE
12-08-13

BRITT PETERS AND ASSOCIATES INC.
consulting engineers
101 W. Camperdown Way
Suite 601
Greenville, SC 29601
(864) 271-8869
Fax (864) 233-5140
www.brittpeters.com
BPA Job No. 13421

SOUTH CAROLINA
Britt, Peters & Associates, Inc.
No. C00781
CERTIFICATE OF AUTHORIZATION

SHELTER COVE
BLDG 121

S4.0

SECTIONS

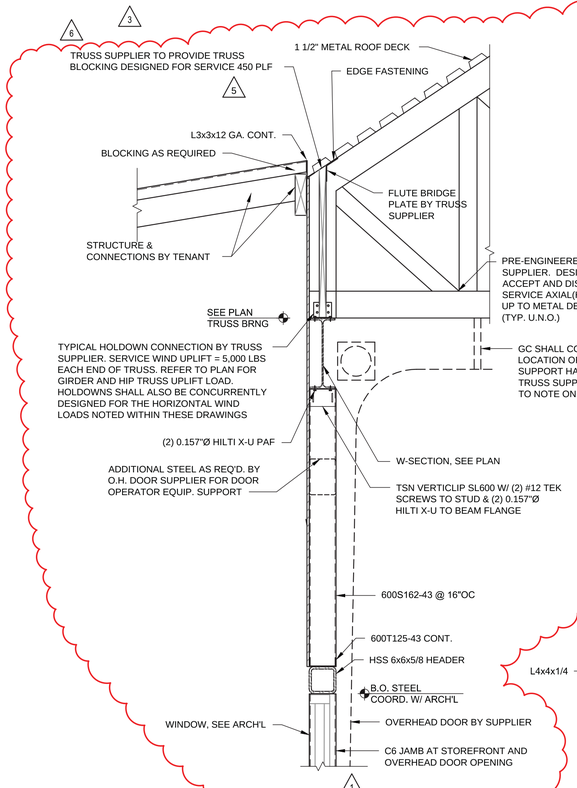

SECTION 1/S4.1
3/4" = 1'-0"

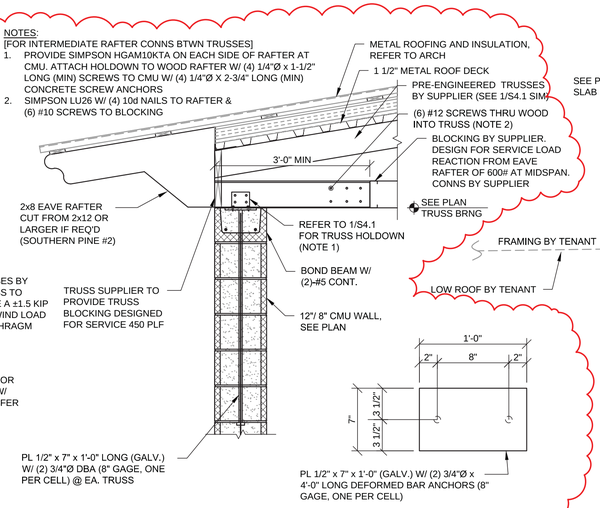

SECTION 2/S4.1
3/4" = 1'-0"

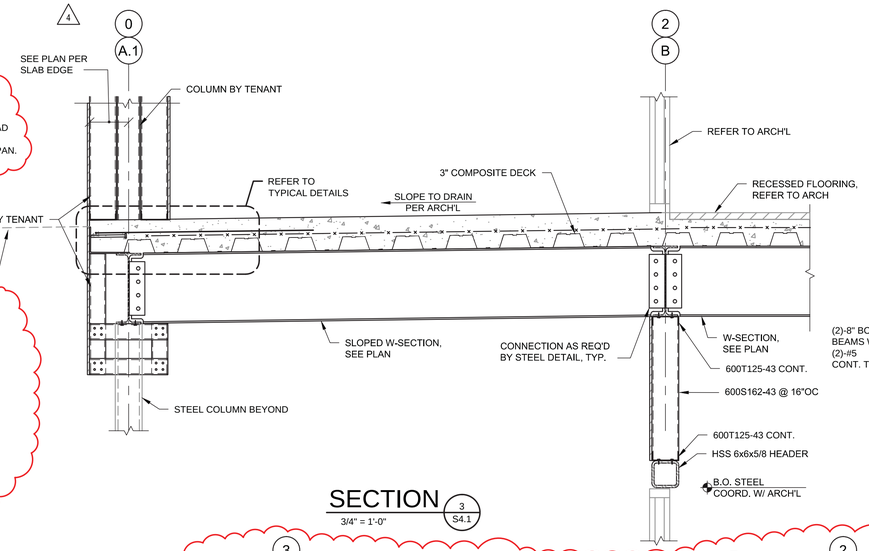

SECTION 3/S4.1
3/4" = 1'-0"

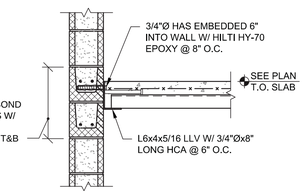

SECTION 4/S4.1
3/4" = 1'-0"

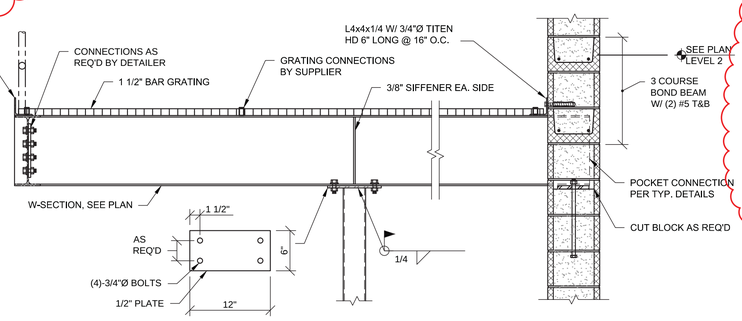

NOTE
1. ALL STEEL GALV.

SECTION 6/S4.1
3/4" = 1'-0"

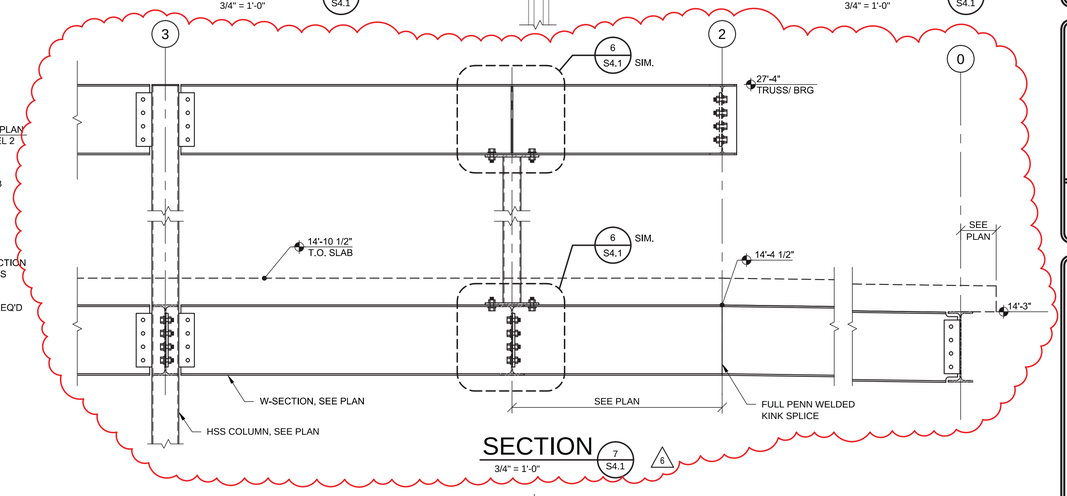

SECTION 7/S4.1
3/4" = 1'-0"

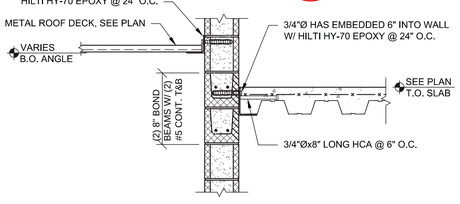

SECTION 5/S4.1
3/4" = 1'-0"

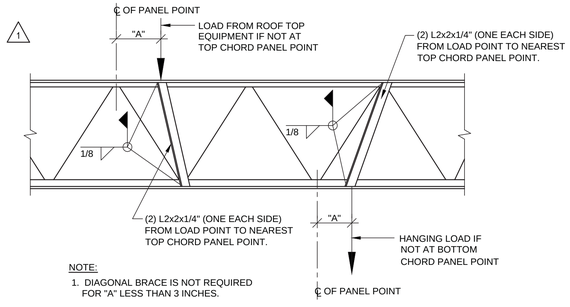

NOTE:
1. DIAGONAL BRACE IS NOT REQUIRED FOR "A" LESS THAN 3 INCHES.

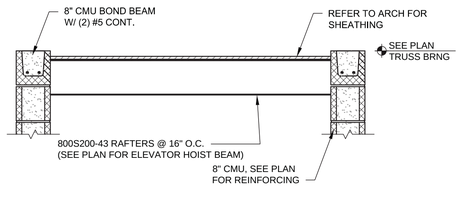

NOTES:
1. LIGHT GAGE TRUSSES NOT SHOWN FOR CLARITY.

SECTION 8/S4.1
3/4" = 1'-0"

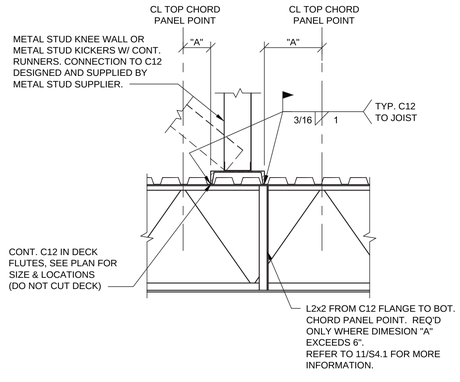

SECTION 9/S4.1
3/4" = 1'-0"

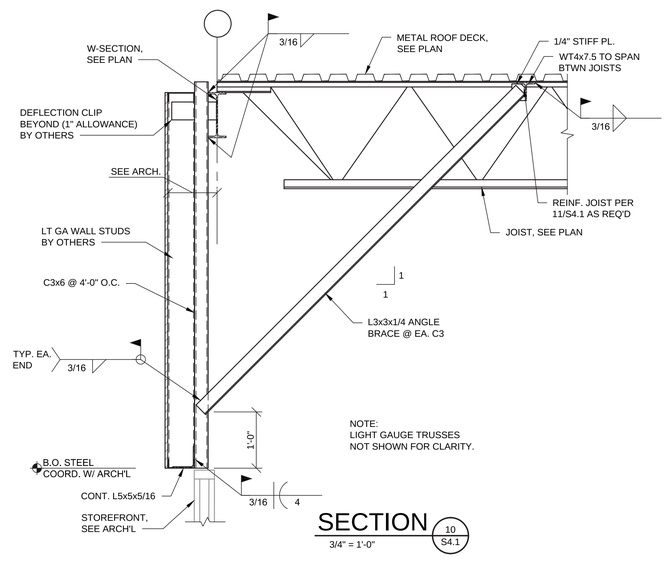

NOTE:
LIGHT GAUGE TRUSSES NOT SHOWN FOR CLARITY.

SECTION 10/S4.1
3/4" = 1'-0"

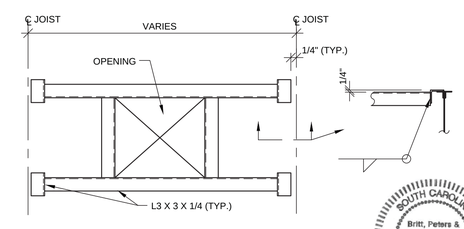

NARRAMORE ASSOCIATES, INC.
Architects & Planners
AMERICAN INSTITUTE OF ARCHITECTS
P.O. Box 8438 Greenville, SC 29604
310 Mills Ave. Greenville, SC 29605
Phone: 864.242.9881
Fax: 864.232.5202
plans@narramore-architects.com

©2014, NARRAMORE ASSOCIATES, INC.
COPYRIGHT PROTECTED BY FEDERAL LAW

SEAL
SOUTH CAROLINA
No. 20920
4-17-14
STEVEN C. DOVER

Blanchard & Calhoun COMMERCIAL
2743 PERIMETER PKWY
BLDG 100 STE 370
AUGUSTA, GA 30909

THE POSEIDON - BLDG. 121
24 SHELTER COVE LANE
HWY. 278, MILE MARKER 8
HILTON HEAD ISLAND, SC 29928

REVISIONS

1	02-06-14
3	02-25-14
4	03-10-14
5	03-27-14
6	04-14-14

DOCUMENT DATA
BUILDING 121
PROJECT NUMBER
13914
ISSUE DATE
12-08-13

BRITT PETERS AND ASSOCIATES INC.
consulting engineers
101 W. Camperdown Way
Suite 601
Greenville, SC 29601
(864) 271-8869
Fax (864) 233-5140
www.brittpeters.com
BPA Job No. 13421

SOUTH CAROLINA
Britt, Peters & Associates, Inc.
No. C00781
CERTIFICATE OF AUTHORIZATION

SHELTER COVE BLDG 121

S4.1

SECTIONS

GENERAL NOTES:

1. THESE DOCUMENTS ARE INTENDED TO DESCRIBE THE WORK REQUIRED TO CONSTRUCT THE BUILDING SHELL AS DELINEATED, AS WELL AS PROVIDE TYPICAL DESIGNS FOR LEASE UNITS OF THE SIZES INDICATED. THESE TYPICAL DESIGNS ARE BASED ON THE OWNER'S STANDARD LEASE UNITS AND ARE NOT INTENDED TO BE SPECIFICALLY DESIGNED FOR INDIVIDUAL TENANTS. PRIOR TO CONSTRUCTION, THE GENERAL CONTRACTOR SHALL COORDINATE WITH THE OWNER'S REPRESENTATIVE THE SPECIFIC TENANT REQUIREMENTS FOR EACH SPACE TO INCLUDE: INTERIOR WALL LOCATIONS, TOILET REQUIREMENTS, MECHANICAL REQUIREMENTS, POWER & LIGHTING REQUIREMENTS, REAR DOOR LOCATIONS, STOREFRONT REQUIREMENTS, ETC.
2. FOR ALL RATED CONSTRUCTION AND RATED PENETRATIONS, SEE SHEET A1.4.
3. FOR ALL DOOR HARDWARE SCHEDULES, DOOR SCHEDULES AND WALL TYPES, REFER TO SHEET A1.4.
4. REFER TO CIVIL ENGINEERING DRAWINGS FOR HC ACCESSIBLE PARKING SPACES AND CURB CUT LOCATIONS.
5. REFER TO EXTERIOR ELEVATIONS FOR LOCATION OF ALL SAFETY GLAZING.
6. PROVIDE 1/2" FIBER EXPANSION JOINTS FULL WIDTH OF SIDEWALK AT COLUMN LINES.
7. MAXIMUM SLOPE OF SIDEWALKS TO BE 1:20. MAXIMUM CROSS-SLOPE IS 1:50.
8. ALL FIRE WALLS AND FIRE RATED PARTITIONS SHALL BE IDENTIFIED WITH SIGNAGE AS TO FIRE RATING AND PROTECTION OF OPENINGS. STENCIL IN CONCEALED SPACES THE FOLLOWING: "(__) HOUR FIRE AND SMOKE BARRIER - PROTECT ALL OPENINGS." IDENTIFICATION SHALL BE SPACED NO MORE THAT 12'-0' O.C. WITH A MINIMUM LETTER SIZE OF 2" IN HEIGHT ON A CONTRASTING BACKGROUND.
9. ALL EXTERIOR WALL PENETRATIONS SHALL BE SEALED FROM AIR LEAKAGE PER IECC SECTION 502.4. (1)

OCCUPANCY LOAD

BUILDING AREA - ALLOWABLE:

OCCUPANCY LOAD:

	AREA SUM	OCCUPANT SUM
BUILDING 121 - REST.	10,794/15	717
BUILDING 122 - RETAIL	960/30	32
GROSS FLOOR AREA:	11,754 S.F.	749

EXIT WIDTH: REQUIRED: 129" PROVIDED: 612'
644 OCCUPANTS X .20 INCHES = 129"

(1)

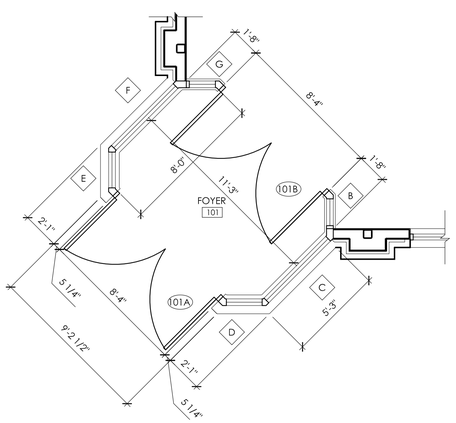

2 ENLARGED PLAN
SCALE: 1/4" = 1'-0"

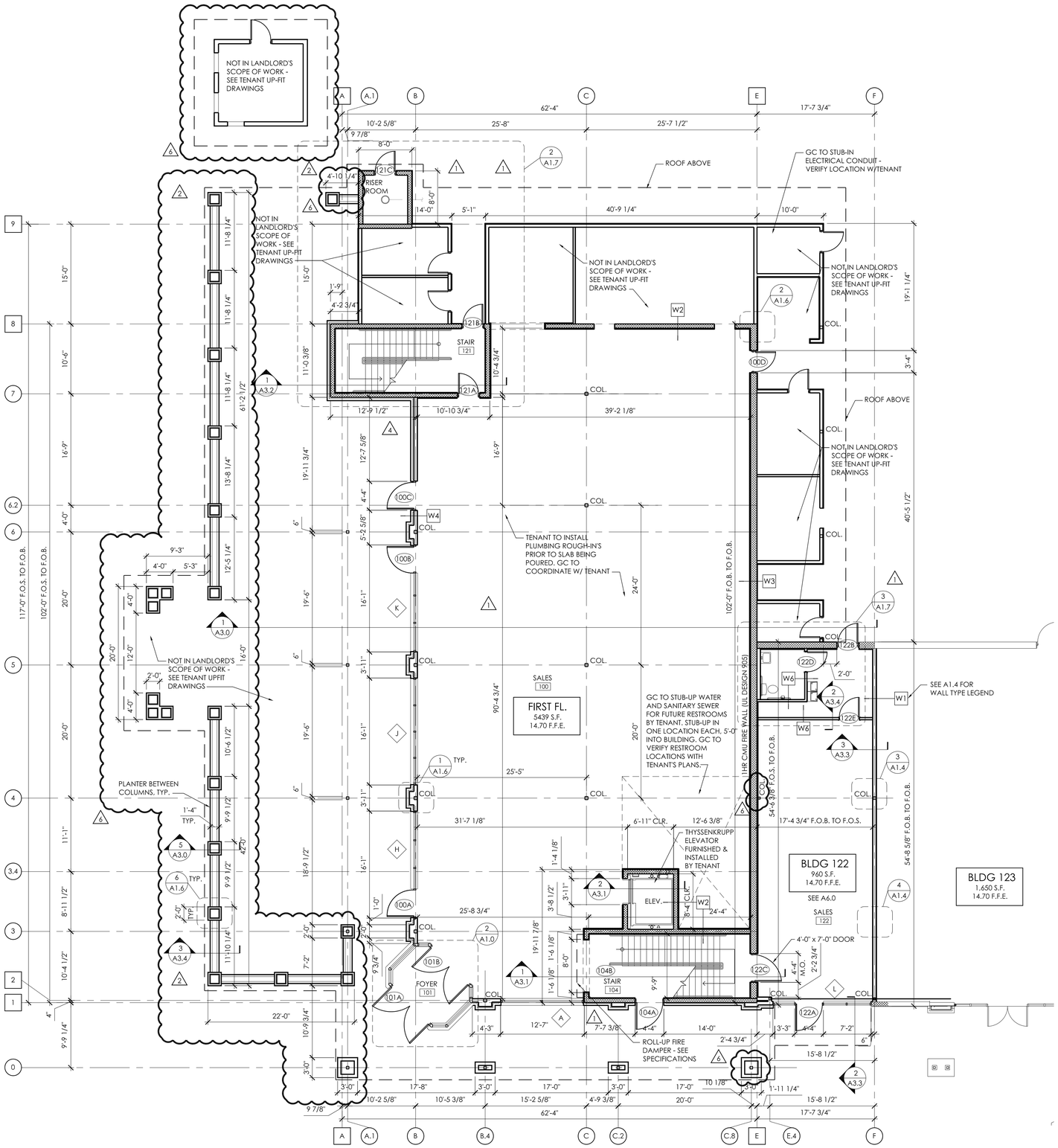

1 FIRST FLOOR PLAN
SCALE: 1/8" = 1'-0"

NARRAMORE ASSOCIATES, INC.
Architects & Planners
AMERICAN INSTITUTE OF ARCHITECTS
P.O. Box 8438 Greenville, SC 29604
310 Mills Ave. Greenville, SC 29605
Phone: 864.242.9881
Fax: 864.232.5202
plans@narramore-architects.com

©2014, NARRAMORE ASSOCIATES, INC.
COPYRIGHT PROTECTED BY FEDERAL LAW

SEAL

Blanchard & Calhoun COMMERCIAL
2743 PERIMETER PKWY
BLDG 100 STE 370
AUGUSTA, GA 30909

POSEIDON - BLDG. 121 & 122
38 SHELTER COVE LANE
HWY. 278, MILE MARKER 8
HILTON HEAD ISLAND, SC 29928

REVISIONS
(1) 02-06-14
(2) 02-14-14
(3) 03-10-14
(6) 04-14-14

DOCUMENT DATA
BUILDING 121
PROJECT NUMBER
13914
ISSUE DATE
01-10-14

SHELTER COVE
HILTON HEAD, SC

A1.0

FIRST FLOOR PLAN
BUILDING 121

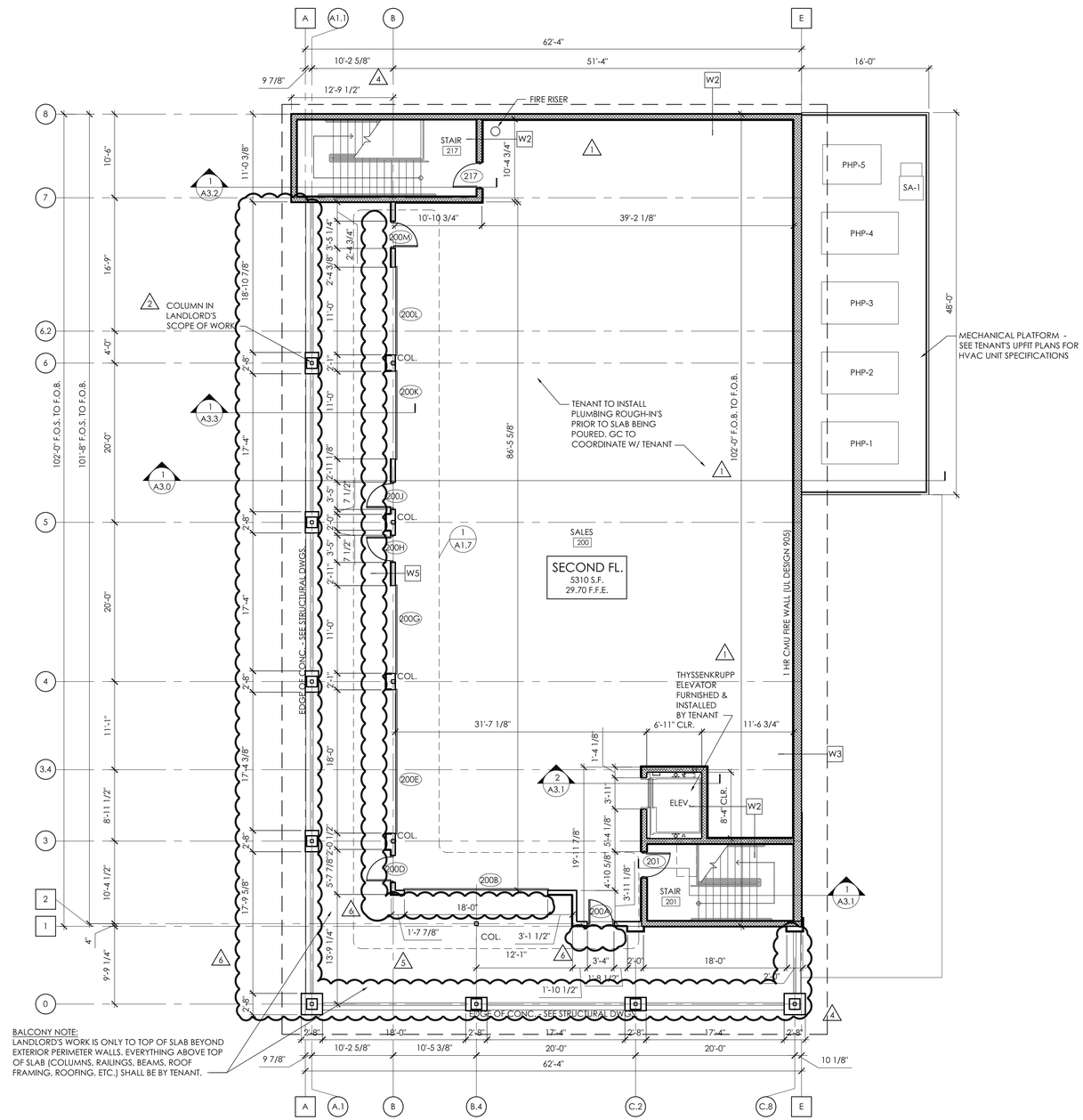

3 NOT USED

2 NOT USED

1 SECOND FLOOR PLAN

SCALE: 1/8" = 1'-0"

PLAN NORTH

NARRAMORE ASSOCIATES, INC.
Architects & Planners
AMERICAN INSTITUTE OF ARCHITECTS

P.O. Box 8438 Greenville, SC 29604
310 Mills Ave. Greenville, SC 29605

Phone: 864.242.9881
Fax: 864.232.5202

plans@narramore-architects.com

©2014, NARRAMORE ASSOCIATES, INC.
COPYRIGHT PROTECTED BY FEDERAL LAW

SEAL

Blanchard & Calhoun COMMERCIAL

2743 PERIMETER PKWY
BLDG 100 STE 370
AUGUSTA, GA 30909

POSEIDON - BLDG. 121 & 122

38 SHELTER COVE LANE
HWY. 278, MILE MARKER 8
HILTON HEAD ISLAND, SC 29928

REVISIONS

1	02-06-14
2	02-14-14
3	02-25-14
4	03-10-14
5	03-27-14
6	04-14-14

DOCUMENT DATA
BUILDING 121
PROJECT NUMBER
13914
ISSUE DATE
01-10-14

SHELTER COVE
HILTON HEAD, SC

A1.1

SECOND FLOOR PLAN
BUILDING 121

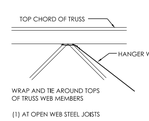

LOCATION OF BRACING WIRES

NTS

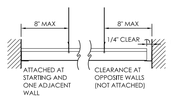

RUNNERS @ WALLS

NTS

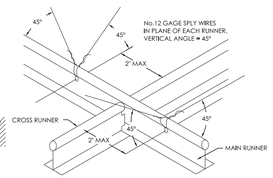

TYPICAL CEILING BRACING

NTS

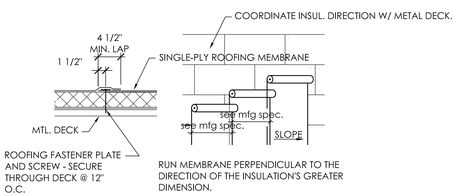

4 ROOFING LAYOUT PLAN

NTS

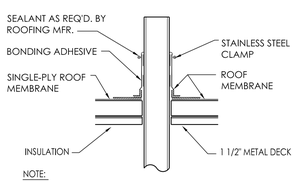

NOTE:

FLASHING MIN. 6" HIGH WHENEVER POSSIBLE AND MUST BE ABOVE ROOF FLOOD LEVEL IN ALL CASES.

3 VENT STACK FLASHING

NTS

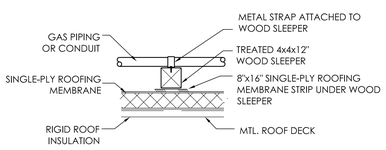

2 ROOF PIPING SLEEPER

NTS

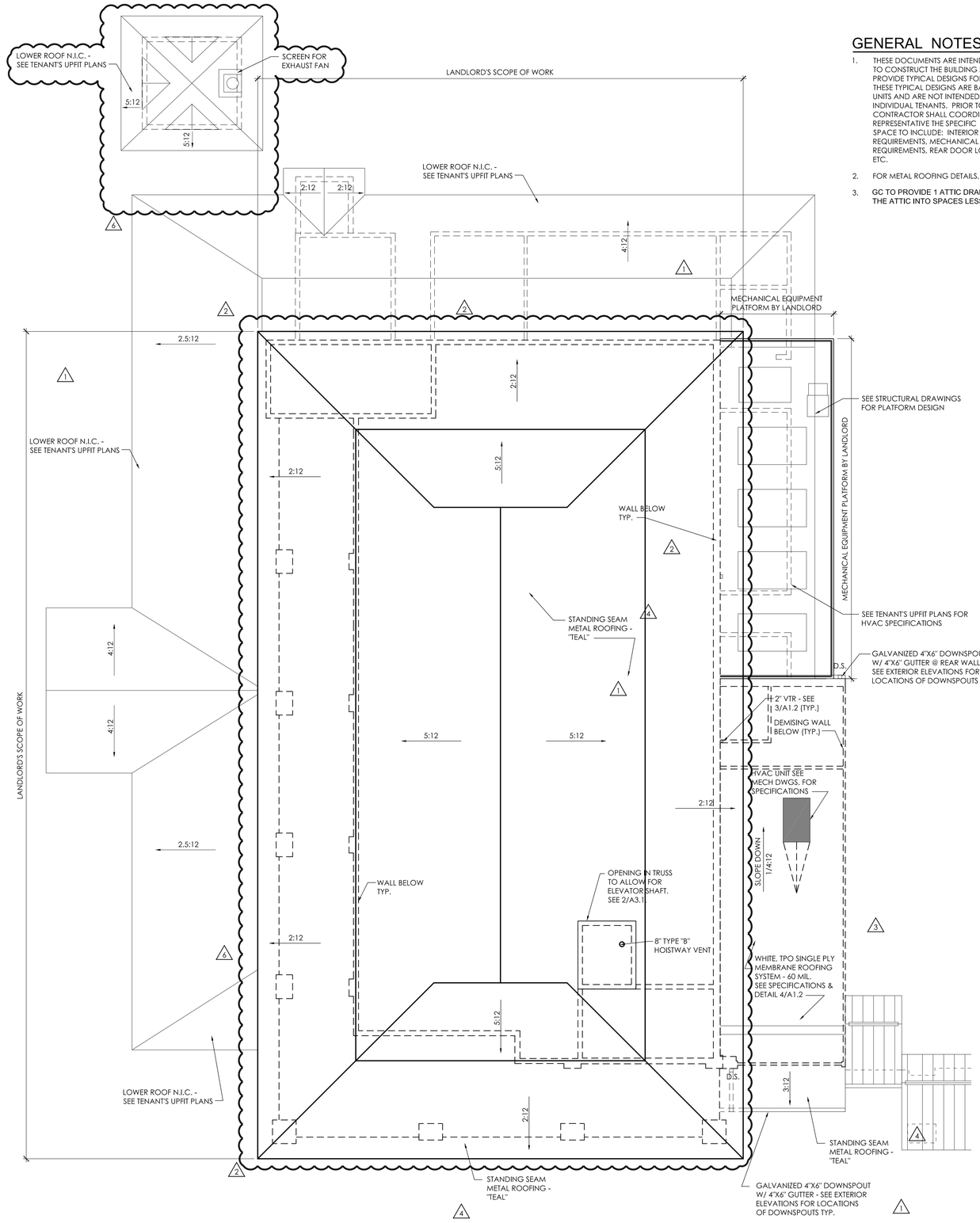

1 ROOF PLAN

SCALE: 1/8" = 1'-0"

PLAN NORTH

GENERAL NOTES:

1. THESE DOCUMENTS ARE INTENDED TO DESCRIBE THE WORK REQUIRED TO CONSTRUCT THE BUILDING SHELL AS DELINEATED, AS WELL AS PROVIDE TYPICAL DESIGNS FOR LEASE UNITS OF THE SIZES INDICATED. THESE TYPICAL DESIGNS ARE BASED ON THE OWNER'S STANDARD LEASE UNITS AND ARE NOT INTENDED TO BE SPECIFICALLY DESIGNED FOR INDIVIDUAL TENANTS. PRIOR TO CONSTRUCTION, THE GENERAL CONTRACTOR SHALL COORDINATE WITH THE OWNER'S REPRESENTATIVE THE SPECIFIC TENANT REQUIREMENTS FOR EACH SPACE TO INCLUDE: INTERIOR WALL LOCATIONS, TOILET REQUIREMENTS, MECHANICAL REQUIREMENTS, POWER & LIGHTING REQUIREMENTS, REAR DOOR LOCATIONS, STOREFRONT REQUIREMENTS, ETC.
2. FOR METAL ROOFING DETAILS, REFER TO SHEET A1.3
3. GC TO PROVIDE 1 ATTIC DRAFTSTOP PER CODE TO SUBDIVIDE THE ATTIC INTO SPACES LESS THAN 3,000.

NARRAMORE ASSOCIATES, INC.
Architects & Planners
AMERICAN INSTITUTE OF ARCHITECTS
P.O. Box 8438 Greenville, SC 29604
310 Mills Ave. Greenville, SC 29605
Phone: 864.242.9881
Fax: 864.232.5202
plans@narramore-architects.com

©2014, NARRAMORE ASSOCIATES, INC.
COPYRIGHT PROTECTED BY FEDERAL LAW

SEAL

Blanchard & Calhoun COMMERCIAL
2743 PERIMETER PKWY
BLDG 100 STE 370
AUGUSTA, GA 30909

POSEIDON - BLDG. 121 & 122
38 SHELTER COVE LANE
HWY. 278, MILE MARKER 8
HILTON HEAD ISLAND, SC 29928

REVISIONS
1 02-06-14
2 02-14-14
3 02-25-14
4 03-10-14
5 04-14-14

DOCUMENT DATA
BUILDING 121
PROJECT NUMBER
13914
ISSUE DATE
01-10-14

SHELTER COVE
HILTON HEAD, SC

A1.2

ROOF PLAN
BUILDING 121

NOTE:
METAL ROOFING DETAILS PROVIDED PER MANUFACTURER. SEE ARCHITECTURAL SECTIONS AND STRUCTURAL DRAWINGS FOR ADDITIONAL ROOF INFORMATION.

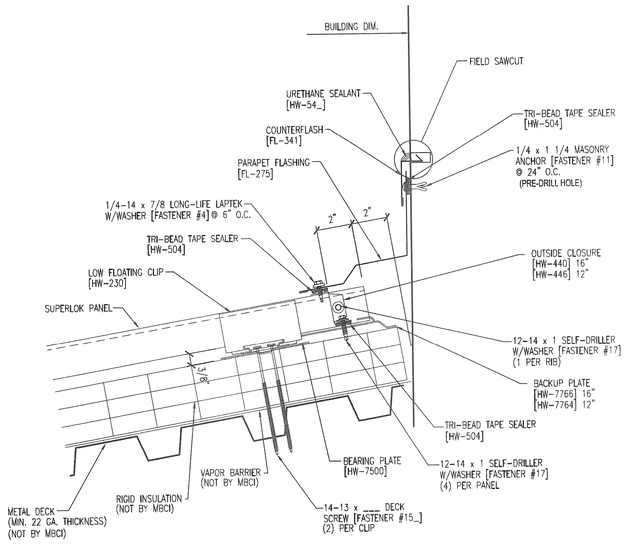

4 METAL ROOFING DETAILS
N.T.S.

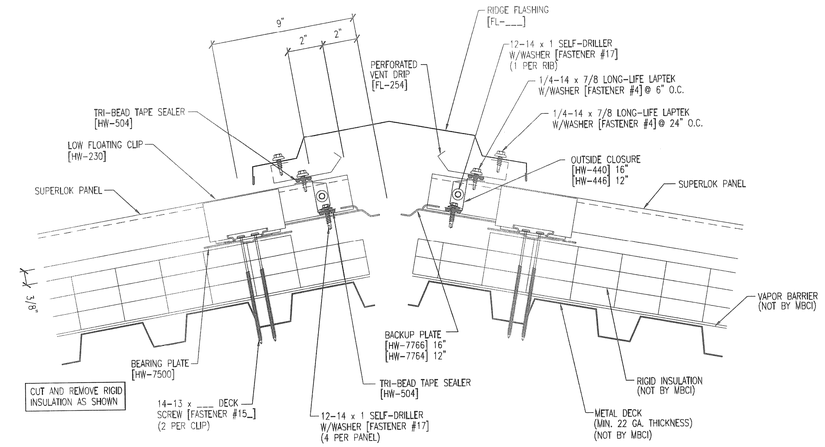

2 METAL ROOFING DETAILS
N.T.S.

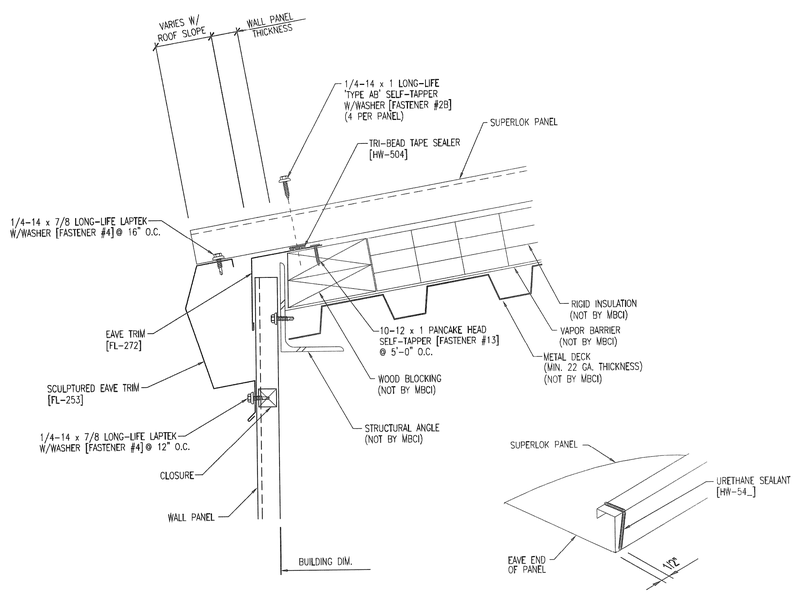

3 METAL ROOFING DETAILS
N.T.S.

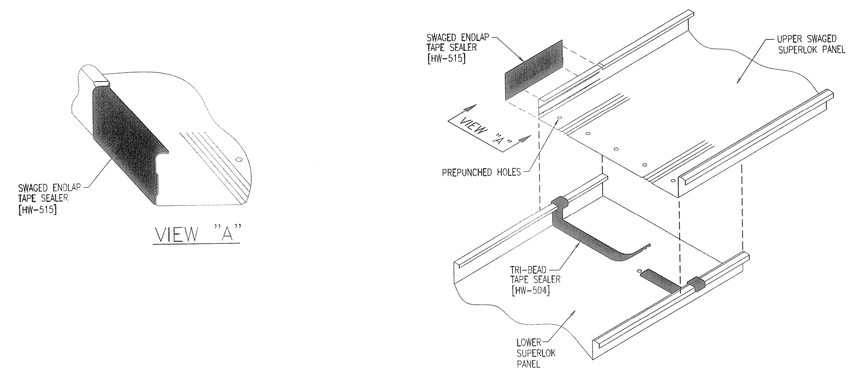

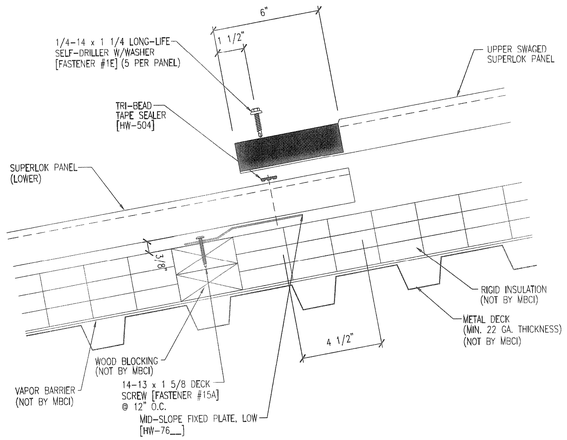

1 METAL ROOFING DETAILS
N.T.S.

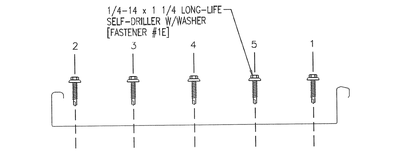

FASTENER INSTALLATION SEQUENCE

NARRAMORE ASSOCIATES, INC.
Architects & Planners
AMERICAN INSTITUTE OF ARCHITECTS
P.O. Box 8438 Greenville, SC 29604
310 Mills Ave. Greenville, SC 29605
Phone: 864.242.9881
Fax: 864.232.5202
plans@narramore-architects.com

©2014, NARRAMORE ASSOCIATES, INC.
COPYRIGHT PROTECTED BY FEDERAL LAW

SEAL
STATE OF SOUTH CAROLINA
NARRAMORE ASSOCIATES, A.I.A. ARCHITECTS, GREENVILLE, SC
REGISTERED ARCHITECT
1/10/14

Blanchard & Calhoun COMMERCIAL
2743 PERIMETER PKWY
BLDG 100 STE 370
AUGUSTA, GA 30909

POSEIDON - BLDG. 121
24 SHELTER COVE LANE
HWY. 278, MILE MARKER 8
HILTON HEAD ISLAND, SC 29928

REVISIONS

DOCUMENT DATA
BUILDING 121
PROJECT NUMBER
13914
ISSUE DATE
01-10-14

SHELTER COVE
HILTON HEAD, SC

A1.3

ROOF DETAILS
BUILDING 121

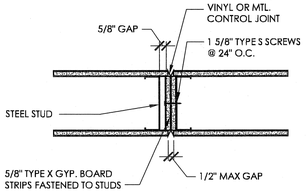

4 1 HR CONTROL JOINT

SCALE: 1 1/2" = 1'-0"

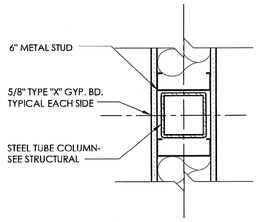

3 PLAN DETAIL

SCALE: 1 1/2" = 1'-0"

U.L. DESIGN No. U905 (2-HOUR)

1. Concrete Blocks* - Nominal 12" x 8"x 16". Classification D-2 (2-Hour)

2. Mortar - Blocks laid in full bed of mortar, nom. 3/8" thick, of not less than 2-1/4 and not more than 3-1/2 parts of clean sharp sand to 1 part Portland cement (proportioned by volume) and not more than 50 percent hydrated lime (by cement volume). Vertical joints staggered.

3. Portland Cement Stucco or Gypsum Plaster - Add 1/2 hour to classification if used. Where combustible members are framed in wall, plaster or stucco must be applied on the face opposite framing to achieve a max. Classification of 1 1/2 hour attached to concrete blocks.

4. Loose Masonry Fill - If all core spaces are filled with loose dry expanded slag, expanded clay or shale (Rotary Kiln Process), water repellant vermiculite masonry fill insulation, or silicone treated perlite loose fill insulation add 2 hr to classification.

*Bearing the UL Classification Mark

U.L. DESIGN No. U465 (1-HOUR)

(TYPICAL TENANT DEMISING WALL)

1. Floor and Ceiling Runners-(not shown)- Channels shaped runners, 3-5/8 in. wide (min), 1-1/4 in. legs, formed from min No. 25 MSG (min No. 20 MSG when Item 4C is used) galv steel, attached to floor and ceiling with fasteners spaced 24 in. OC max.

2. Steel Studs- Channel shaped, 3-5/8 in. wide (min), 1-1/4 in. legs, 3/8 in. folded back returns, formed from min No. 25 MSG(min No. 20 MSG when Item 4C is used) galv steel spaced 24 in. OC max.

3. Batts and Blankets*-(Optional)-Mineral wool or glass fiber batts partially or completely filling stud cavity.
See Batts and Blankets (BZJZ) category for names of Classified companies.

4. Wallboard, Gypsum*-5/8 in thick, 4 ft. wide, attached to steel studs and floor and ceiling track with 1 in. long, Type S steel screws spaced 8 in. OC along edges of board and 12 in. OC in the field of the board. Joints oriented vertically and staggered on opposite sides of the assembly. When attached to item 6 (furring channels), wallboard is screw attached to furring channels with 1 in. long, Type S steel screws spaced 12 in. OC.

American Gypsum Co-Type AG-C

Celotex Corp-Type1.

Continental Gypsum Company- Types CG-C, CG5-5, CG6-6, CG9-9, CGTC-C.

Georgia-Pacific Corp-Types 5, 9, C,GPFS6.

James Hardie Gypsum Inc.-Type BG-C.

Lafarge Gypsum-Types LGFC2, LGFC2A, LGFC6, LGFC6A, LGFC-C.

National Gypsum Co- Types FSK-G, FSW-G.

National Gypsum Co-Type FR or WR.

Republic Gypsum Co-Type RG-C

Standard Gypsum LLC- Type SG-C.

United States Gypsum Co-Type AR, C, FRX-G, IP-X2, SCX, SHX, WRC, and WRX.

Westroc Inc-Type Westroc Fireboard.

5. Joint tape and Compound-Vinyl, dry or premixed joint compound, applied in two coats to joints and screw heads; paper tape, 2 in. wide, embedded in first layer of compound over all joints. As an alternate, nominal 3/32 in. thick gypsum veneer plaster may be applied to the entire surface of Classified veneer baseboard. Joints reinforced.

*Bearing the UL Classification Marking.

U.L. DESIGN No. P524 (1-HOUR)

1. Roof Covering* - Consisting of hot-mopped or cold-application materials compatible with Item 3 described herein which provide Class A, B, or C coverings. See Roofing Materials and Systems Directory-Roof Covering Materials (TEVT).

1A. Roofing Membranes* - In lieu of Item 1, single-ply membrane that is either ballasted, adhered or mechanically attached to Item 3 described herein as permitted under the respective company's Classification. See Fire Resistance Directory-Roofing Membranes (CHCI) Category.

1B. Metal Roof Deck Panels* - In lieu of or in addition to Items 1 and 1A, the roof covering may consist of mechanically fastened 24 MSG galv or painted steel roof deck panels. Panelsmay be installed above a steel purlin assembly per metal roof deck manufacturer's specifications. Steel purlin assembly to be installed transverse to steel roof trusses (Item 4). A line of sealant or tape may be used at panel side and endlaps. See Metal Roof Deck Panels Category in the Roofing Materials and Systems Directory (TJPV) or Fire Resistance Directory (CETW)for names of manufacturers.

2. Steel Roof Deck* - Corrugated or fluted steel form units, min 28 MSG painted or galv steel, mechanically fastened at 12 in. O.C. max with No. 10 by 16 self - drilling steel screws to truss-top chords. LOADMASTER SYSTEMS INC - Types PS, HD, ED

3. Gypsum Board* - Gypsum sheathing, supplied in sheets 4ft. wide by 8 to 12 ft long by min ½ in. thick, applied perpendicular to steel roof deck. End joints to occur over crests of steel roof deck, with end-joints staggered in adjacent rows. Sheathing adhered or mechanically attached to steel roof deck. LOADMASTER SYSTEMS INC - Type - DUROFLEX

4. Steel Roof Trusses* - Cold - formed galv steel truss chord and web sections manufactured from steel conforming to ASTM A653 Grade 33 or higher yield strength. Steel thickness of truss chord and web sections as required by design to meet governing code requirements. Truss members connected together with No. 10-16 (min size) self-drilling screws or equivalent. Truss chord and web memebers to be designed in accordance with the American Iron and Steel Institute's Specification for Design of Cold - Formed Steel Structural Members, 1996 Edition. Trusses spaced a max of 24 or 48 in. O.C., refer to Item 8. Where the truss intersects with the interior face of the exterior walls, the min truss depth shall be 11⅞ in. or 8 in. with a min roof slope of 3/12 and a min area in the plane of the truss of 20 sq/ft.

5. Bridging - Size, thickness, shape, number of connection and location of permanent bracing for truss chord and web sections to be determined by truss manufacturer.

6. Furring Channels - Min. 25 MSG galv steel (or heavier as required by design), 2⅝ in. wide by ⅞ in. deep, spaced 24" O.C. , perpendicular to trusses. Two courses of furring channel positioned 6 in. O.C., 3 in. from each end of wallboard. Channel splices overlapped 4 in. beneath steel trusses. Channels secured to each truss with Type S12 by 1/2 in. long screws or with No. 18 SWG galv steel wire double strand saddle ties. Channels tied together with double strand of No. 18 SWG galv steel wire at each end of overlap.

7. Gypsum Board* - Two layers of nom ⅝ in. thick by 48 in. wide boards, installed with long dimension parallel to trusses. Base layer attached to the furring channels using 1 in. long Type S bugle-head screws spaced 8 in. O.C. along butted end-joints and 12 in. O.C. in the field. End-joints of base layer fastened to additional pieces of furring channel to extend min of 3 in. beyond ends of butted end-joints. Butted end-joints staggered min 12 in. in adjacent rows. Face layer of gypsum wallboard secured to furring channels with 1 5/8 in. long Type S bugle-head stell screws spaced 8 in. O.C. at the side-joints and in the field. Face layer side-and end-joints offset 16 in. from base layer-and end-joints. When roof trusses are spaced max 24 in. O.C., the wallboard may be attached directly (and perpendicular) to trusses. When attached to trusses, inner layer of wall board attached to bottom chord of trusses with 1 in. long Type S12 bugle-head steel screws spaced 8 in. O.C. at end-joints and 12 in. O.C. in the field. End-joints of wallboard to occur under trusses. Screws located 1 in. from board side-edges and 1/2 in. from butted ends. face layer side-and end-joints offset min 16 in. from base layer side-and end-joints.

8. Batts and Blankets* - Nom 24 in. by 48 in. by 8 in. thick or 24 in. by 8 in. thick rolls of glass fiber insulation. Each butt placed directly on top of the inner layer of wallboard (Item 7) between roof joists. Density of glass fiber insulation shall be 0.53 pcf.

8A. Loose Fill Material* - As an alternate to Item 8 - 8 in. thickness of loose fill material bearing the UL Classification Marking Surface Burning Characteristics having a flame spread value of 25 or less and a smoke spread value of 50 or less, installed in top of the inner layer of wallboard (Item 7) between roof joists. Density of loose fill material shall be 0.53 pcf.

9. Finishing System - (Not Shown) - Vinyl, dry of premixed joint compound, applied in two coats to joints and screw heads; paper tape, 2 in. wide, embedded in first layer of compund over all joints.

*Bearing the UL Classification Mark.

2 U.L. ASSEMBLIES - TYPICAL WALLS

SCALE: NTS

WALL TYPE LEGEND

W1 TYPICAL DEMISING WALL (1 HOUR)

6" 22 GA. METAL STUD @ 16" O.C.(MAX) WITH 5/8" FIRECODE "X" GYPSUM WALLBOARD EACH SIDE. ASSEMBLY TO EXTEND TO UNDERSIDE OF ROOF DECK. FILL FLUTES AT METAL DECK WITH INSULATION EACH SIDE (OR EQUIVALENT BY OTHERS) 1 HOUR FIRE RATED UL DESIGN U465

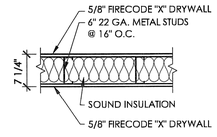

W2 EXTERIOR MASONRY WALL

8" C.M.U. WALL WITH HORIZONTAL JOINT REINFORCING @ 16" O.C. AND WITH VERTICAL REINFORCING AS DESCRIBED ON STRUCTURAL DRAWINGS.

PROVIDE 5/8" GYPSUM WALLBOARD ON 1-1/2" METAL STUD FURRING @ 24" O.C. GYP. BD. TO DECK.

AT STAIRS:
PROVIDE 5/8" GYPSUM WALLBOARD ON 7/8" FURRING CHANNELS @ 24" O.C. GYP. BD. TO DECK.

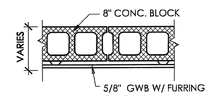

W3 EXTERIOR MASONRY WALL - (2 HOUR)

12" C.M.U. WALL WITH HORIZONTAL JOINT REINFORCING @ 16" O.C. AND WITH VERTICAL REINFORCING AS DESCRIBED ON STRUCTURAL DRAWINGS.

PROVIDE 5/8" GYPSUM WALLBOARD ON 1-1/2" METAL STUD FURRING @ 24" O.C. GYP. BD. TO DECK. 2 HOUR FIRE RATED UL DESIGN U905.

AT STAIRS:
PROVIDE 5/8" GYPSUM WALLBOARD ON 7/8" FURRING CHANNELS @ 24" O.C. GYP. BD. TO DECK. 2 HOUR FIRE RATED UL DESIGN U905.

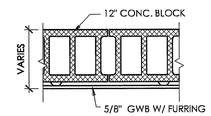

W4 EXTERIOR 6" WALL

6" 22 GA. METAL STUD @ 16" O.C.(MAX) WITH 5/8" FIRECODE "X" GYPSUM WALLBOARD TO ROOF DECK ON INTERIOR FACE. VAPOR BARRIER OVER 1/2" EXTERIOR GRADE SHEATHING CONT. @ EXTERIOR FACE W/ 4" BRICK VENEER - FLEXIBLE MASORY ANCHORS @ 16" O.C. EACH WAY.

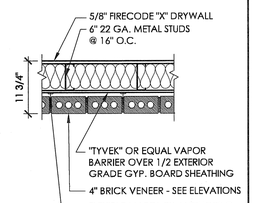

W5 EXTERIOR 6" WALL

6" 22 GA. METAL STUD @ 16" O.C.(MAX) WITH 5/8" FIRECODE "X" GYPSUM WALLBOARD TO ROOF DECK ON INTERIOR FACE. VAPOR BARRIER OVER 1/2" EXTERIOR GRADE SHEATHING CONT. @ EXTERIOR FACE W/ STUCCO.

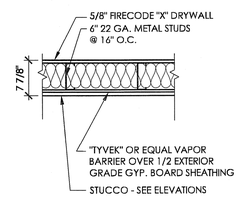

W6 TYPICAL INTERIOR WALL

3 5/8" 22 GA. METAL STUDS @ 16" O.C. WITH 5/8" GYPSUM WALLBOARD .

PROVIDE ADDITIONAL FRAMING AS REQUIRED BY CODE AND AS NECESSARY TO SUPPORT TOILET ROOM AND/OR HANDICAPPED ACCESSORIES. PROVIDE M.R. GYPSUM WALL BOARD IN ALL RESTROOMS.

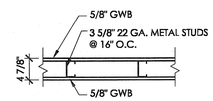

LANDLORD DOOR SCHEDULE

NO.	WIDTH	HEIGHT	THICKNESS	DOOR TYPE	DOOR MATERIAL	DOOR FINISH	FRAME TYPE	FRAME MATERIAL	FRAME FINISH	DETAILS HEAD	DETAILS JAMB	DETAILS SILL	HDW.	RATING	COMMENTS
100A	4'-0"	8'-0"	1 3/4"	B	AL & GLASS	POWDER COAT	3	AL	POWDER COAT	BY ALUM. STOREFRONT VENDOR			1		
100B	4'-0"	8'-0"	1 3/4"	B	AL & GLASS	POWDER COAT	3	AL	POWDER COAT	BY ALUM. STOREFRONT VENDOR			2		
100C	4'-0"	8'-0"	1 3/4"	B	AL & GLASS	POWDER COAT	3	AL	POWDER COAT	BY ALUM. STOREFRONT VENDOR			1		
100D	3'-0"	7'-0"	1 3/4"	C	HM	FIELD PAINT	2	HM	FIELD PAINT	H1	J1		4		
101A	8'-0"	8'-0"	1 3/4"	A	AL & GLASS	POWDER COAT	-	AL	POWDER COAT	BY ALUM. STOREFRONT VENDOR			2		
101B	8'-0"	8'-0"	1 3/4"	A	AL & GLASS	POWDER COAT	-	AL	POWDER COAT	BY ALUM. STOREFRONT VENDOR			2		
104A	4'-0"	8'-0"	1 3/4"	B	AL & GLASS	POWDER COAT	3	AL	POWDER COAT	BY ALUM. STOREFRONT VENDOR			2		
104B	8'-0"	8'-0"	----	E	GALV. STL	GALV.	-	-	-						TIED TO FIRE ALARM SYSTEM
121A	3'-0"	7'-0"	1 3/4"	C	HM	FIELD PAINT	2	HM	FIELD PAINT	H1	J1		4	1	
121B	3'-0"	7'-0"	1 3/4"	C	HM	FIELD PAINT	2	HM	FIELD PAINT	H1	J1		4	1	
121C	3'-0"	8'-0"	1 3/4"	C	HM	FIELD PAINT	2	HM	FIELD PAINT	H1	J1		3		
122A	4'-0"	8'-0"	1 3/4"	B	AL & GLASS	POWDER COAT	3	AL	POWDER COAT	BY ALUM. STOREFRONT VENDOR			2		
122B	4'-0"	7'-0"	1 3/4"	C	HM	FIELD PAINT	2	HM	FIELD PAINT	H1	J1		4		
122C	4'-0"	7'-0"	1 3/4"	C	HM	FIELD PAINT	2	HM	FIELD PAINT	H1	J1		4	1	MAGNETIC HELD OPEN TIED TO FIRE ALARM SYSTEM
122D	3'-0"	6'-8"	1 3/4"	F	S.C. WOOD	FIELD PAINT	1	HM	FIELD PAINT	H2	J2		5		
122E	3'-0"	6'-8"	1 3/4"	F	S.C. WOOD	FIELD PAINT	1	HM	FIELD PAINT	H2	J2		6		
200A	3'-0"	7'-0"	1 3/4"	A	AL & GLASS	POWDER COAT	3	AL	POWDER COAT	BY ALUM. STOREFRONT VENDOR			1		
200B	18'-2"	8'-1"	1 3/4"	D	AL & GLASS	POWDER COAT	-	AL	POWDER COAT						
200C															NOT USED
200D	3'-0"	7'-0"	1 3/4"	A	AL & GLASS	POWDER COAT	3	AL	POWDER COAT	BY ALUM. STOREFRONT VENDOR			1		
200E	18'-2"	8'-1"	1 3/4"	D	AL & GLASS	POWDER COAT	-	AL	POWDER COAT						
200F															NOT USED
200G	11'-2"	8'-1"	1 3/4"	D	AL & GLASS	POWDER COAT	-	AL	POWDER COAT						
200H	3'-0"	7'-0"	1 3/4"	A	AL & GLASS	POWDER COAT	3	AL	POWDER COAT	BY ALUM. STOREFRONT VENDOR			1		
200J	3'-0"	7'-0"	1 3/4"	A	AL & GLASS	POWDER COAT	3	AL	POWDER COAT	BY ALUM. STOREFRONT VENDOR			1		
200K	11'-2"	8'-1"	1 3/4"	D	AL & GLASS	POWDER COAT	-	AL	POWDER COAT						
200L	11'-2"	8'-1"	1 3/4"	D	AL & GLASS	POWDER COAT	-	AL	POWDER COAT						
200M	3'-0"	7'-0"	1 3/4"	A	AL & GLASS	POWDER COAT	3	AL	POWDER COAT	BY ALUM. STOREFRONT VENDOR			1		
201	3'-0"	7'-0"	1 3/4"	C	HM	FIELD PAINT	2	HM	FIELD PAINT	H1	J1		4	1	
217	3'-0"	7'-0"	1 3/4"	C	HM	FIELD PAINT	2	HM	FIELD PAINT	H1	J1		4	1	

LANDLORD HARDWARE SCHEDULE

* MANUFACTURERS AND MODEL NUMBERS LISTED SET A STANDARD FOR QUALITY ONLY AND ARE NOT INTENDED TO PREVENT USE OF OTHER SIMILAR HARDWARE MANUFACTURER PRODUCTS.

SET	DESCRIPTION
1	HARDWARE BY DOOR MANUF. w/ CYL. LOCK (KEY OUTSIDE. TURN LATCH INSIDE) FINISH TO MATCH DOOR: OVERHEAD CLOSER: ALUMINUM THRESHOLD (CAULKED): FULLY WEATHER-STRIPPED w/ RUBBER SEAL @ BOTTOM
2	HARDWARE BY DOOR MANUF. w/ CYL. LOCK (KEY OUTSIDE. TURN LATCH INSIDE) FINISH TO MATCH DOOR: OVERHEAD CLOSER: ALUMINUM THRESHOLD (CAULKED): FULLY WEATHER-STRIPPED w/ RUBBER SEAL @ BOTTOM: PANIC HARDWARE/PUSH BAR
3	1 1/2 PR. BUTTS: HAGER BB 179; 4 1/2 x 4 1/2 USP NRP; SCHLAGE S51PD-ORB (LEVER HANDLE INSIDE, ORBIT HANDLE OUTSIDE) W/ STRIKEGUARD, 626 FINISH; LCN No. 4040 CLOSER; THRESHOLD - ZERO #650 SERIES; SWEEP - ZERO #39A; FULL RUBBER WEATHERSTRIPPING, ZERO #485; PEEP HOLE: DOOR BUZZER; TAMPER PROOF LATCH GUARD
4	1 1/2 PR. BUTTS: HAGER BB 179; 4 1/2 x 4 1/2 USP NRP; SCHLAGE S51PD-ORB W/ STRIKEGUARD, 626 FINISH; LCN No. 4040 CLOSER; THRESHOLD - ZERO #650 SERIES; SWEEP - ZERO #39A; FULL RUBBER WEATHERSTRIPPING, ZERO #485; PEEP HOLE: DOOR BUZZER; TAMPER PROOF LATCH GUARD; PANIC HARDWARE/PUSH BAR
5	1 1/2 PR. BUTTS; PRIVACY SET - SCHLAGE S40D-LEV (LEVER HANDLES) w/ 625 FINISH ON TOILET SIDE AND 626 FINISH ON OUTSIDE; IVES 436 (B10) FLOOR STOP.
6	1 1/2 PR. BUTTS; LOCKSET - SCHLAGE S 51 PD (W/ LEVER HANDLES: LOCK ON HALL SIDE) w/ 626 FINISH: IVES 410 (B10) WALL BUMPER

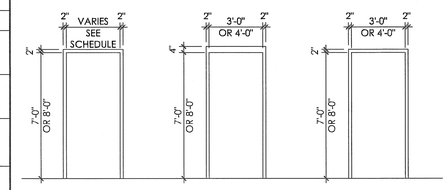

3 METAL EXTERIOR DOOR FRAME

2 METAL EXTERIOR DOOR FRAME

1 METAL INTERIOR DOOR FRAME

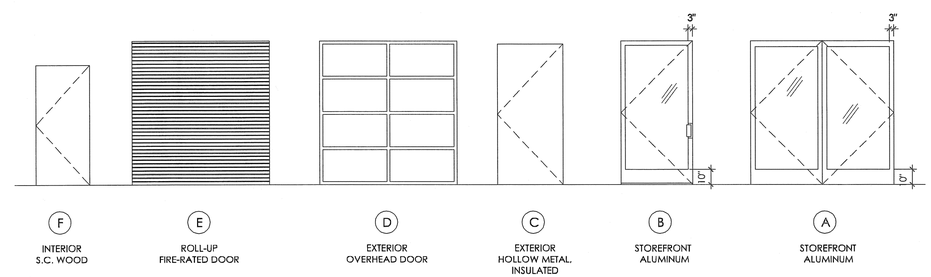

F INTERIOR S.C. WOOD

E ROLL-UP FIRE-RATED DOOR

D EXTERIOR OVERHEAD DOOR

C EXTERIOR HOLLOW METAL, INSULATED

B STOREFRONT ALUMINUM

A STOREFRONT ALUMINUM

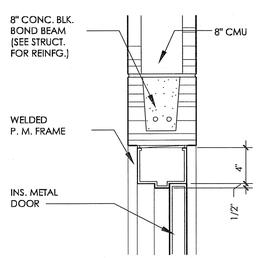

H-1 HEAD

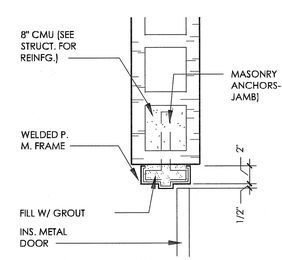

J-1 JAMB

MASONRY WALL

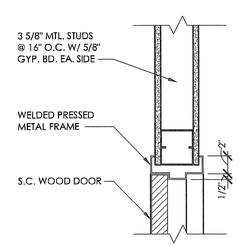

H-2 HEAD

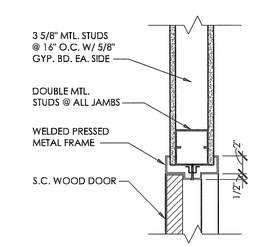

J-2 JAMB

METAL STUD WALL

1 DOOR DETAILS - HEAD AND JAMB

SCALE: 1/2" = 1'-0"

NARRAMORE ASSOCIATES, INC.
Architects & Planners
AMERICAN INSTITUTE OF ARCHITECTS
P.O. Box 8438 Greenville, SC 29604
310 Mills Ave. Greenville, SC 29605
Phone: 864.242.9881
Fax: 864.232.5202
plans@narramore-architects.com

©2014, NARRAMORE ASSOCIATES, INC.
COPYRIGHT PROTECTED BY FEDERAL LAW

SEAL
STATE OF SOUTH CAROLINA
DAVID L. NARRAMORE
GREENVILLE, SC
11402
REGISTERED ARCHITECT
5/1/14

Blanchard & Calhoun COMMERCIAL
2743 PERIMETER PKWY
BLDG 100 STE 370
AUGUSTA, GA 30909

POSEIDON - BLDG. 121 & 122
38 SHELTER COVE LANE
HWY. 278, MILE MARKER 8
HILTON HEAD ISLAND, SC 29928

STATE OF SOUTH CAROLINA
NARRAMORE ASSOCIATES, A.I.A. ARCHITECTS, INC.
GREENVILLE, SC
B84033
REGISTERED ARCHITECTS

REVISIONS
1 02-06-14
2 02-14-14
3 03-27-14

DOCUMENT DATA
BUILDING 121
PROJECT NUMBER
13914
ISSUE DATE
01-10-14

SHELTER COVE
HILTON HEAD, SC

A1.4

DOOR SCHEDULES
BUILDING 121

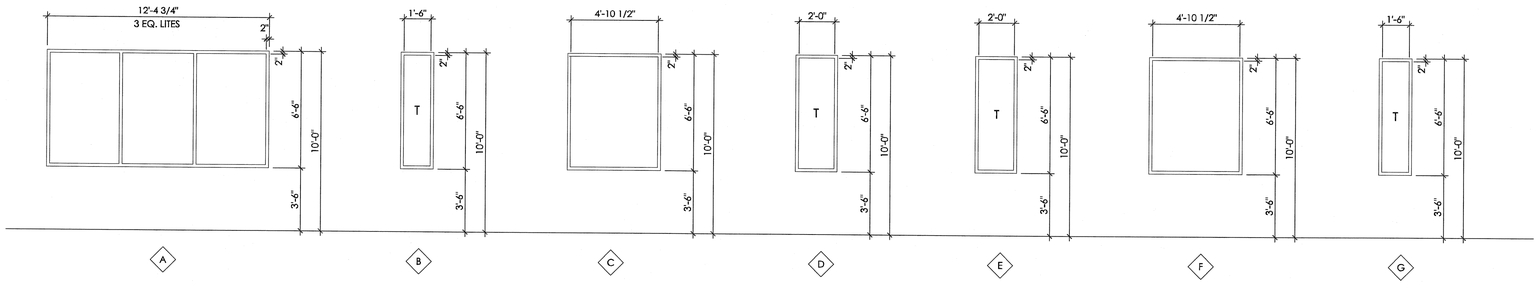

NOTE:

1. ALL GLAZING IS 1" CLEAR, LOW "E". COLOR TO MATCH PPG SOLARBAN SOLARGREY 70XL.
2. ALL FRAMES EQUAL TO KAWNEER 450 SERIES STOREFRONT SYSTEM.
3. "T" DENOTES TEMPERED GLAZING WHERE REQUIRED BY CODE.
4. COLOR : CLEAR ANODIZED ALUMINUM. 2

1 4

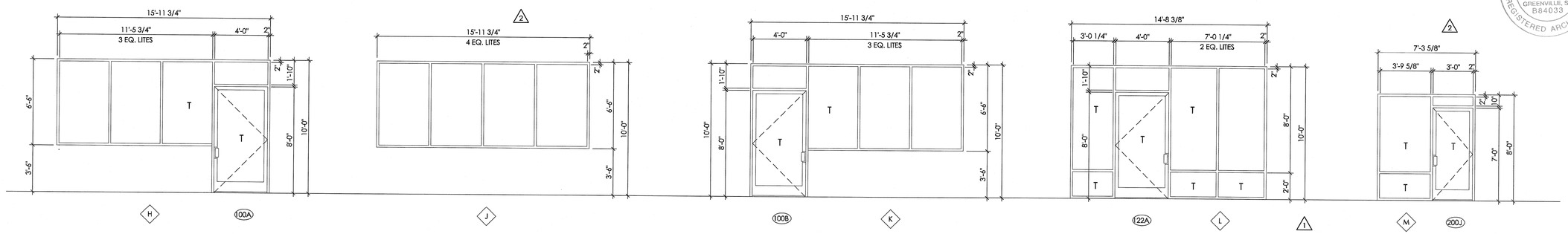

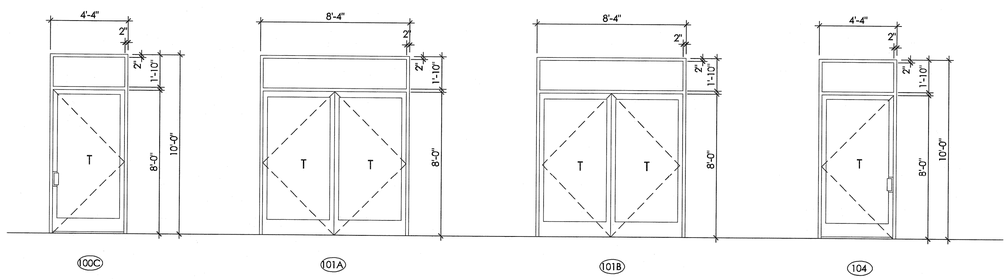

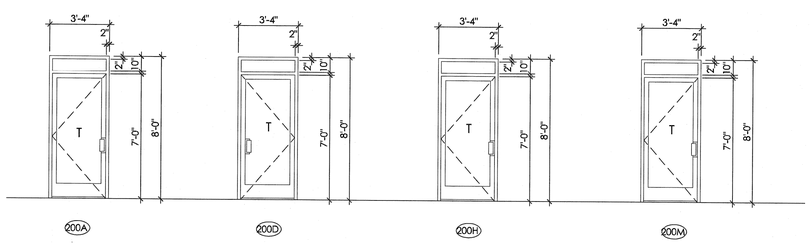

4

1

ALL STOREFRONT OPENINGS AND OVERHEAD DOORS SHALL RECEIVE A CORRUGATED GALVANIZED STEEL STORM PANEL SYSTEM WITH PERMANENT EXTRUDED ALUMINUM TRACK SYSTEM BY EASTERN METAL SUPPLY OR EQUAL. HURRICANE PANEL SUBCONTRACTOR SHALL SUBMIT AN COMPLETE ENGINEERED DESIGN TO THE CITY FOR REVIEW AND APPROVAL. SEE SPECIFICATIONS. BASIS OF DESIGN IS STORM PANEL SYSTEM BY STORM SOLUTIONS OF THE LOWCOUNTRY- (843) 227-1027 OR EQUAL.

NARRAMORE ASSOCIATES, INC.
Architects & Planners
AMERICAN INSTITUTE OF ARCHITECTS

P.O. Box 8438 Greenville, SC 29604
310 Mills Ave. Greenville, SC 29605

Phone: 864.242.9881
Fax: 864.232.5202

plans@narramore-architects.com

©2014, NARRAMORE ASSOCIATES, INC.
COPYRIGHT PROTECTED BY FEDERAL LAW

STATE OF SOUTH CAROLINA
NARRAMORE ASSOCIATES, A.I.A. ARCHITECTS, INC.
GREENVILLE, SC
B84033
REGISTERED ARCHITECTS

SEAL
STATE OF SOUTH CAROLINA
DAVID L. NARRAMORE
GREENVILLE, SC
1402
REGISTERED ARCHITECT
3/10/14

Blanchard & Calhoun COMMERCIAL
2743 PERIMETER PKWY
BLDG 100 STE 370
AUGUSTA, GA 30909

POSEIDON - BLDG. 121 & 122

38 SHELTER COVE LANE
HWY. 278, MILE MARKER 8
HILTON HEAD ISLAND, SC 29928

REVISIONS
1 02-06-14
2 02-14-14
4 03-10-14

DOCUMENT DATA
BUILDING 121
PROJECT NUMBER
13914
ISSUE DATE
01-10-14

SHELTER COVE
HILTON HEAD, SC

A1.5

STOREFRONT DETAILS
BUILDING 121

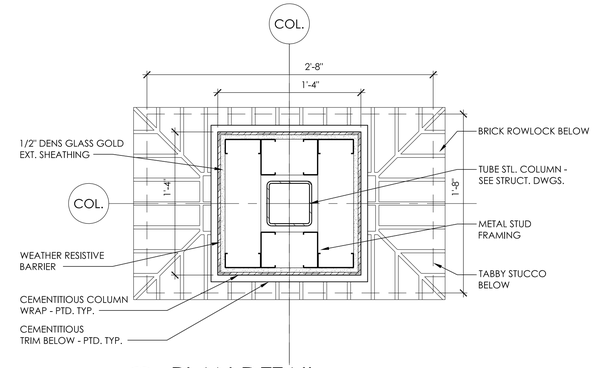

7 PLAN DETAIL
SCALE: 1 1/2"=1'-0"

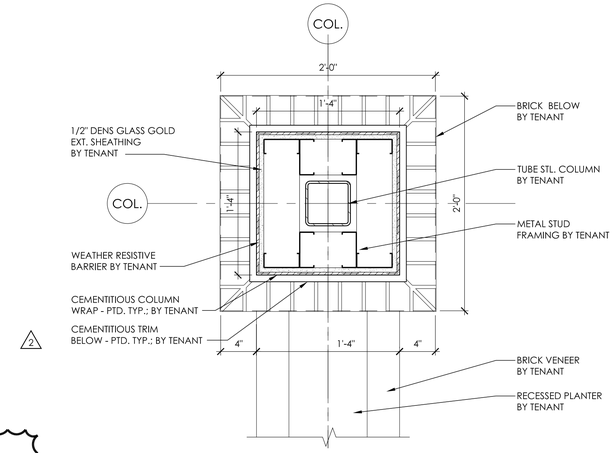

6 PLAN DETAIL
SCALE: 1 1/2"=1'-0"

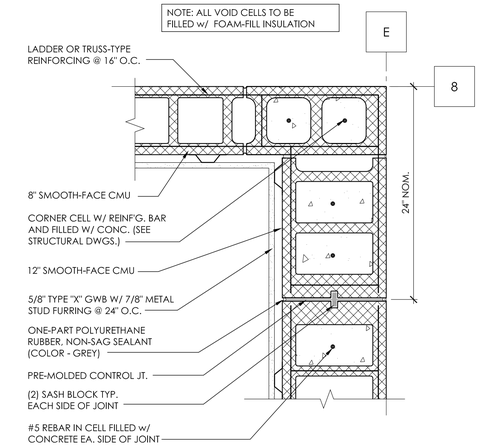

2 PLAN DETAIL
SCALE: 1 1/2"=1'-0"

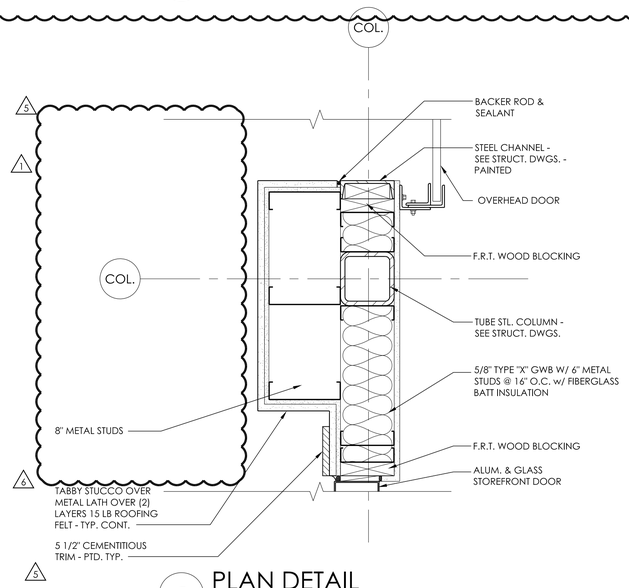

5 PLAN DETAIL
SCALE: 1 1/2"=1'-0"

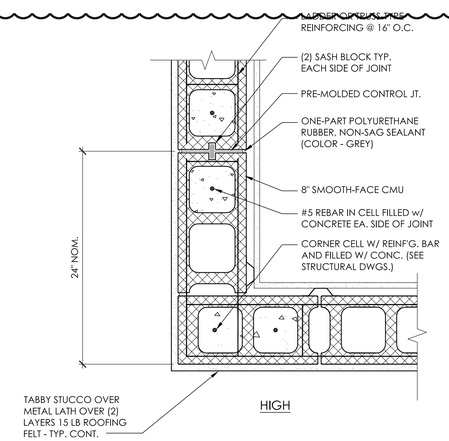

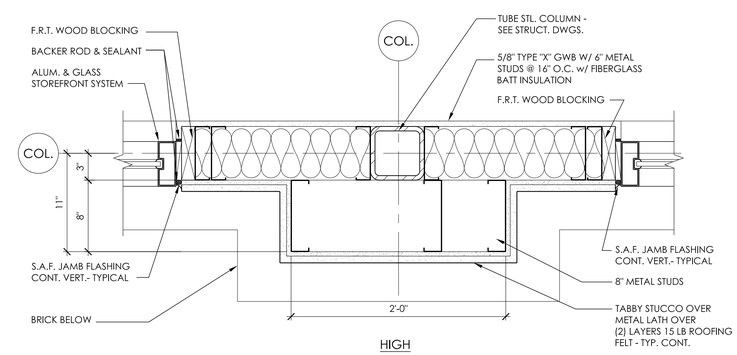

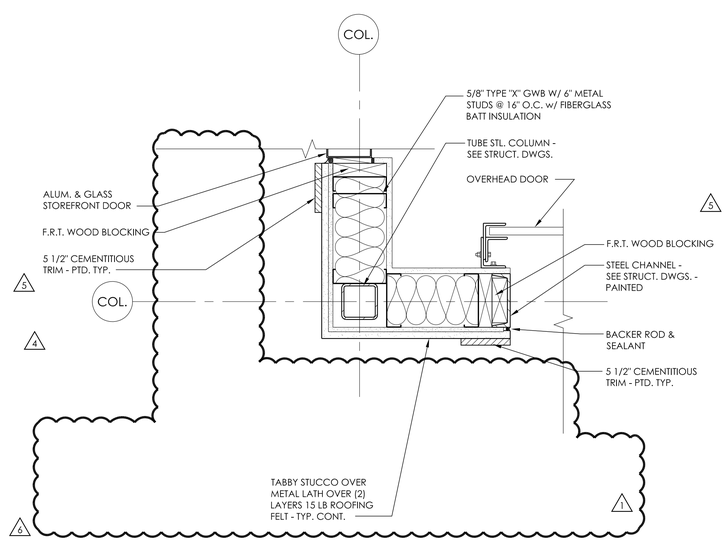

4 PLAN DETAIL
SCALE: 1 1/2"=1'-0"

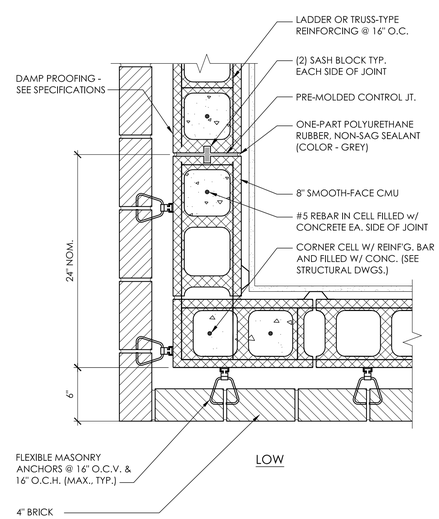

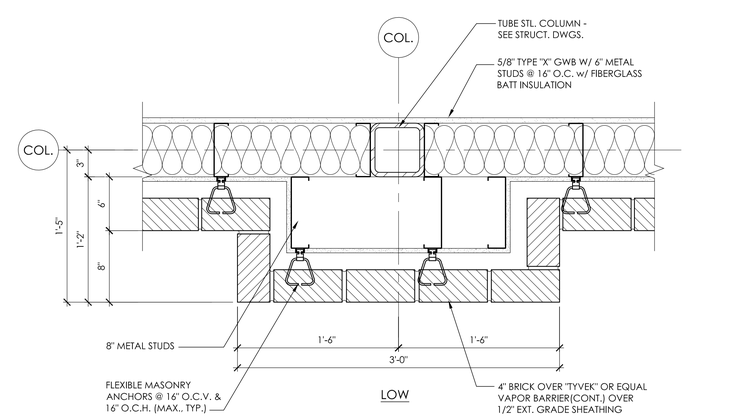

3 PLAN DETAIL
SCALE: 1 1/2"=1'-0"

1 PLAN DETAIL
SCALE: 1 1/2"=1'-0"

NARRAMORE ASSOCIATES, INC.
Architects & Planners
AMERICAN INSTITUTE OF ARCHITECTS
P.O. Box 8438 Greenville, SC 29604
310 Mills Ave. Greenville, SC 29605
Phone: 864.242.9881
Fax: 864.232.5202
plans@narramore-architects.com

©2014, NARRAMORE ASSOCIATES, INC.
COPYRIGHT PROTECTED BY FEDERAL LAW

SEAL

Blanchard & Calhoun COMMERCIAL
2743 PERIMETER PKWY
BLDG 100 STE 370
AUGUSTA, GA 30909

POSEIDON - BLDG. 121 & 122
38 SHELTER COVE LANE
HWY. 278, MILE MARKER 8
HILTON HEAD ISLAND, SC 29928

REVISIONS
1 02-06-14
2 02-14-14
4 03-10-14
5 03-27-14
6 04-14-14

DOCUMENT DATA
BUILDING 121
PROJECT NUMBER
13914
ISSUE DATE
01-10-14

SHELTER COVE
HILTON HEAD, SC

A1.6

PLAN DETAILS
BUILDING 121

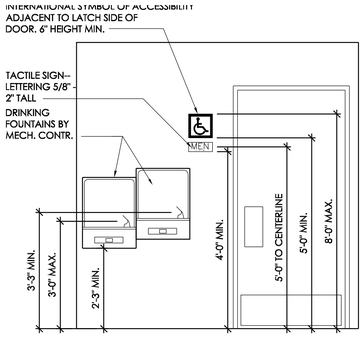

7 ADA SIGN & DRINKING FOUNTAIN ELEVATION (TYP)

SCALE: 1/2" = 1'-0"

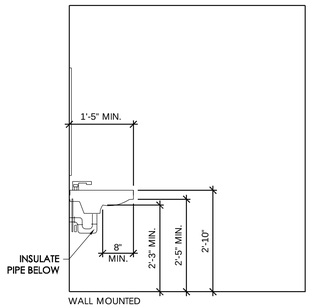

6 RESTROOM ELEVATION

SCALE: 1/2"=1'-0"

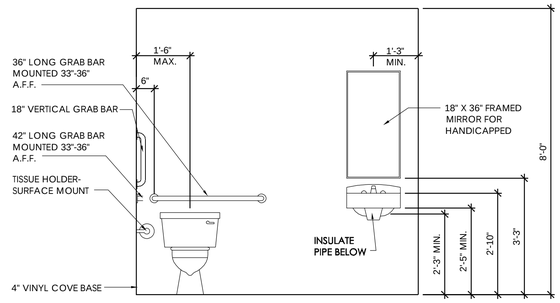

5 RESTROOM ELEVATION

SCALE: 1/2"=1'-0"

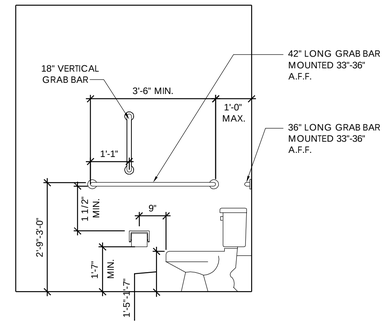

4 RESTROOM ELEVATION

SCALE: 1/2"=1'-0"

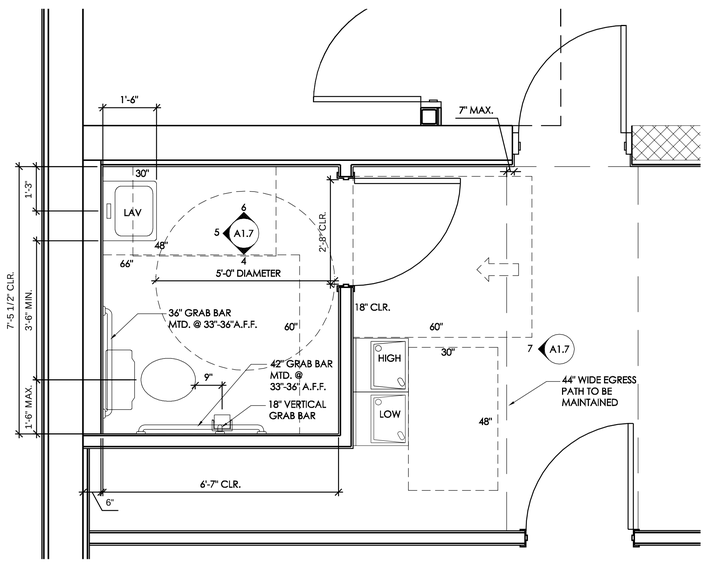

3 BUILDING 122 ENLARGED RESTROOM PLAN

SCALE: 1/2"=1'-0"

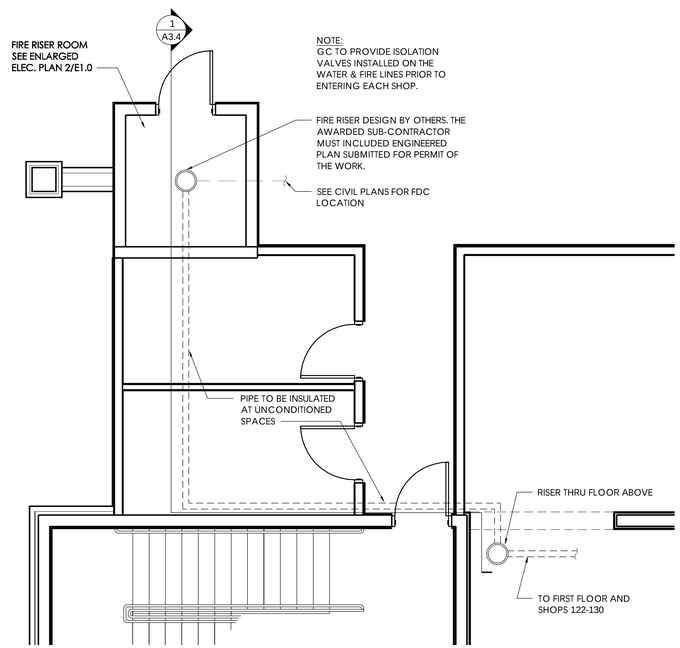

2 SPRINKLER RISER ROOM ENLARGED PLAN

SCALE: 1/4"=1'-0"

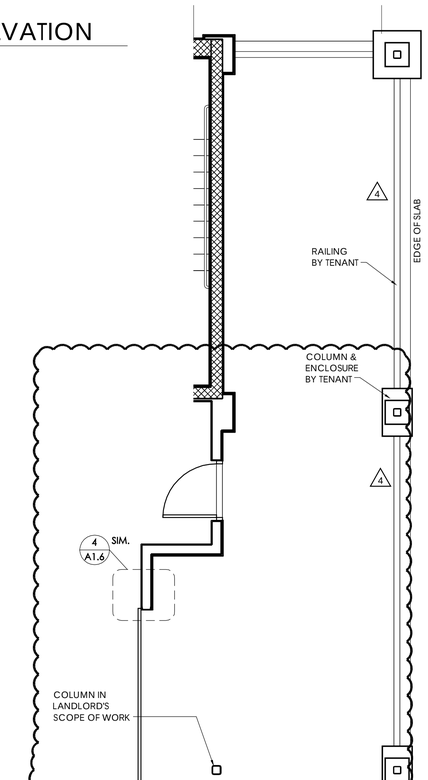

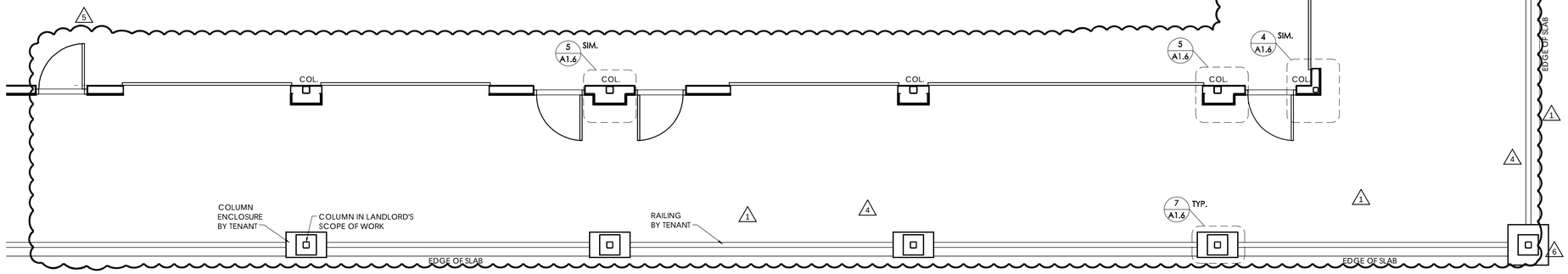

1 ENLARGED PLAN

SCALE: 1/4"=1'-0"

RESTROOM NOTES:

1. ALL DIMENSIONS TO WALLS ARE TO FACE OF GYP. BOARD OR FACE OF MASONRY.

2. 5/8" TYPE "X" GYPSUM WALLBOARD ALONG UNIT DEMISING WALL SHALL BE INSTALLED CONTINUOUS PRIOR TO FRAMING TOILET ROOM WALLS (SEE FLOOR PLAN).

3. OTHER WALLS OF TOILET ROOMS SHALL BE 1/2" GYPSUM WALLBOARD ON 3 5/8" METAL STUDS @ 16" O.C.

4. PROVIDE ALL MISCELLANEOUS WOOD BLOCKING AS REQUIRED FOR TOILET FIXTURES AND ACCESSORIES. WALL BRACING FOR GRAB BARS SHALL BE SUFFICIENT TO WITHSTAND SHEAR FORCE OF 250 lbf.

5. PROVIDE ONE (1) WALL-MOUNTED TOILET TISSUE DISPENSER FOR EACH WATER CLOSET.

6. WHERE TOILET FIXTURES BACK MASONRY WALL (SEE OVERALL FLOOR PLAN), CONTRACTOR SHALL PROVIDE 6" METAL STUD CHASE WALL LOCATED AS REQUIRED TO ALLOW PROPER INSTALLATION OF ALL FIXTURES.

7. ALL ENLARGED TOILET ROOM PLANS ARE GENERAL ROTATION OR OPPOSITE HAND LAYOUT MAY OCCUR. REFER TO OVERALL FLOOR PLAN FOR EXACT ORIENTATION.

NARRAMORE ASSOCIATES, INC.
Architects & Planners
AMERICAN INSTITUTE OF ARCHITECTS
P.O. Box 8438 Greenville, SC 29604
310 Mills Ave. Greenville, SC 29605
Phone: 864.242.9881
Fax: 864.232.5202
plans@narramore-architects.com

©2014, NARRAMORE ASSOCIATES, INC.
COPYRIGHT PROTECTED BY FEDERAL LAW

SEAL

Blanchard & Calhoun COMMERCIAL
2743 PERIMETER PKWY
BLDG 100 STE 370
AUGUSTA, GA 30909

POSEIDON - BLDG. 121 & 122
38 SHELTER COVE LANE
HWY. 278, MILE MARKER 8
HILTON HEAD ISLAND, SC 29928

REVISIONS

1	02-06-14
2	02-14-14
4	03-10-14
5	03-27-14
6	04-14-14

DOCUMENT DATA
BUILDING 121
PROJECT NUMBER
13914
ISSUE DATE
01-10-14

SHELTER COVE
HILTON HEAD, SC

A1.7

PLAN DETAILS
BUILDING 121

EXTERIOR FINISH SCHEDULE

CMU SCHEME:
PAINTED TO MATCH TABBY STUCCO

BRICK SCHEME:
BRICK - " STEEPLECHASE" BY BORAL

MORTAR SCHEME:
ALL MORTAR SHALL BE "DESERT BUFF"
BY HOLCIM OR EQUAL

STUCCO:
TABBY STUCCO - "IVORY BUFF"

SIDING
SW #7042 "SHOJI WHITE"

TRIM
SW #6199 "RARE GRAY"

FASCIA, COLUMNS, GUTTERS, & DOWNPOUTS
SW #7075 "WEB GRAY"

METAL ROOFING AND COPING:
STANDING SEAM METAL ROOFING - "TEAL"
BY PAC-CLAD, HIGH SEAM PANEL

STOREFRONT SYSTEM:
ALL GLASS SHALL BE 1' LOW-E
INSULATED GLASS W/ALUMINUM FRAMES -
COLOR CLEAR ANODIZED ALUMINUM

NOTE:
ALL ELECTRICAL EQUIPMENT, AND DOORS ARE TO BE PAINTED TO MATCH ADJACENT WALLS.

GENERAL NOTES:

1. ALL STOREFRONT OPENINGS AND OVERHEAD DOORS SHALL RECEIVE A CORRUGATED GALVANIZED STEEL STORM PANEL SYSTEM WITH PERMANENT EXTRUDED ALUMINUM TRACK SYSTEM BY EASTERN METAL SUPPLY OR EQUAL. HURRICANE PANEL SUBCONTRACTOR SHALL SUBMIT AN COMPLETE ENGINEERED DESIGN TO THE CITY FOR REVIEW AND APPROVAL. SEE SPECIFICATIONS. BASIS OF DESIGN IS STORM PANEL SYSTEM BY STORM SOLUTIONS OF THE LOWCOUNTRY- (843) 227-1027 OR EQUAL.
2. GC TO PROVIDE 1 ATTIC DRAFTSTOP PER CODE TO SUBDIVIDE THE ATTIC INTO SPACES LESS THAN 3,000 SQ.FT.

ALL ROOF LOUVERS SHOWN ARE PREFINISHED ALUMINUM BY "AIRLINE" #LSA6D38FL. UL LISTED FOR 50 PSF WIND LOAD. COLOR: "WHITE"

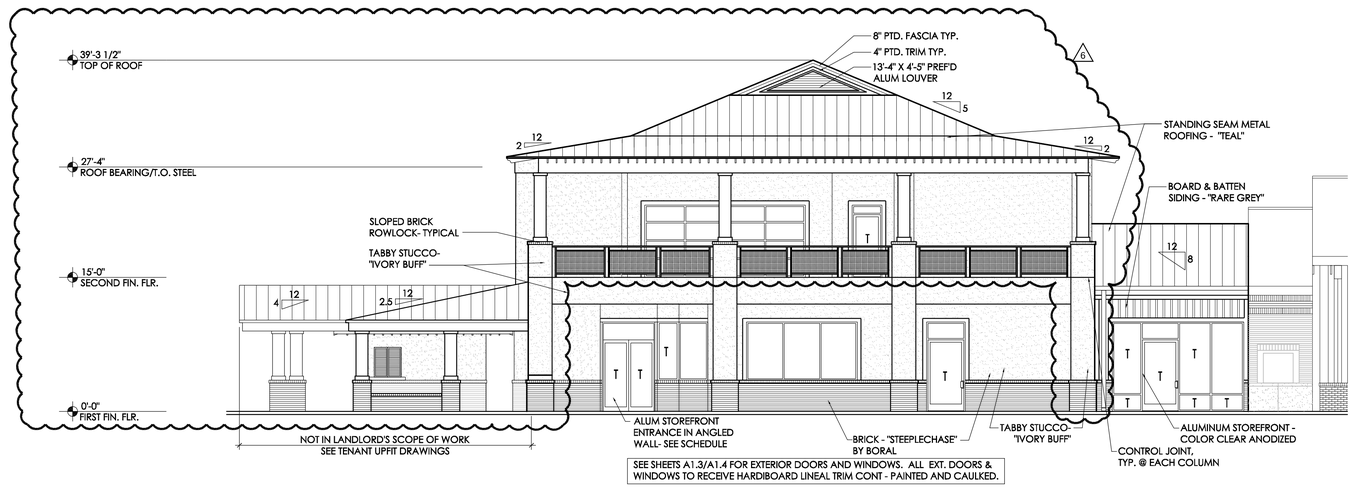

SEE SHEETS A1.3/A1.4 FOR EXTERIOR DOORS AND WINDOWS. ALL EXT. DOORS & WINDOWS TO RECEIVE HARDIBOARD LINEAL TRIM CONT - PAINTED AND CAULKED.

NOTE:
ALL CONSTRUCTION ON BALCONIES ABOVE TOP OF SLAB BEYOND FACE OF EXTERIOR BUILDING WALLS (CONTAINING CONDITIONED SPACE) SHALL BE BY TENANT. THIS INCLUDES ALL COLUMNS, BEAMS, RAFTERS, ROOF, HANDRAILS, AND BALUSTER SCREENS.

2 WEST ELEVATION
SCALE: 1/8" = 1'-0"

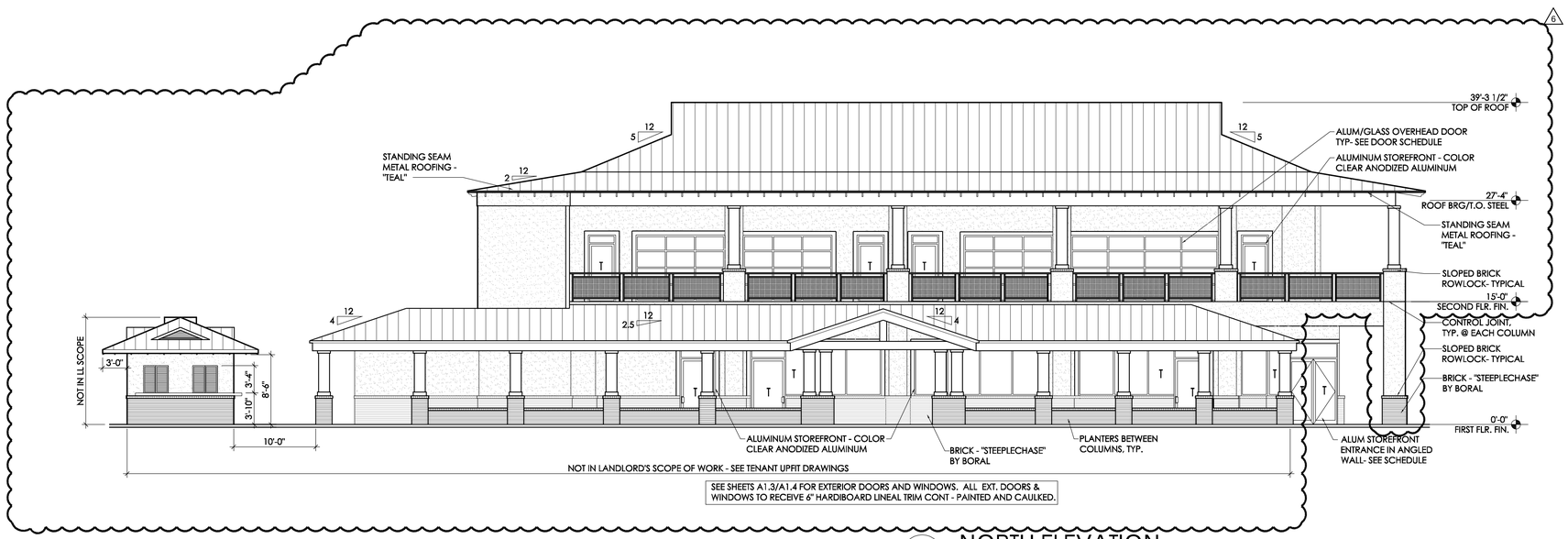

SEE SHEETS A1.3/A1.4 FOR EXTERIOR DOORS AND WINDOWS. ALL EXT. DOORS & WINDOWS TO RECEIVE 6" HARDIBOARD LINEAL TRIM CONT - PAINTED AND CAULKED.

1 NORTH ELEVATION
SCALE: 1/8" = 1'-0"

NARRAMORE ASSOCIATES, INC.
Architects & Planners
AMERICAN INSTITUTE OF ARCHITECTS
P.O. Box 8438 Greenville, SC 29604
310 Mills Ave. Greenville, SC 29605
Phone: 864.242.9881
Fax: 864.232.5202
plans@narramore-architects.com

©2014, NARRAMORE ASSOCIATES, INC.
COPYRIGHT PROTECTED BY FEDERAL LAW

SEAL

Blanchard & Calhoun COMMERCIAL
2743 PERIMETER PKWY
BLDG 100 STE 370
AUGUSTA, GA 30909

POSEIDON - BLDG. 121 & 122
38 SHELTER COVE LANE
HWY. 278, MILE MARKER 8
HILTON HEAD ISLAND, SC 29928

REVISIONS
1 02-06-14
2 02-14-14
3 02-25-14
4 03-10-14
5 03-27-14
6 04-14-14

DOCUMENT DATA
BUILDING 121
PROJECT NUMBER
13914
ISSUE DATE
01-10-14

SHELTER COVE
HILTON HEAD, SC
A2.0
EXTERIOR ELEVATION
BUILDING 121

EXTERIOR FINISH SCHEDULE

CMU SCHEME:
PAINTED TO MATCH TABBY STUCCO

BRICK SCHEME:
BRICK - " STEEPLECHASE" BY BORAL

MORTAR SCHEME:
ALL MORTAR SHALL BE "DESERT BUFF"
BY HOLCIM OR EQUAL

STUCCO:
TABBY STUCCO - "IVORY BUFF"

SIDING
SW #7042 "SHOJI WHITE"

TRIM
SW #6199 "RARE GRAY"

FASCIA, COLUMNS, GUTTERS, & DOWNPOUTS
SW #7075 "WEB GRAY"

METAL ROOFING AND COPING:
STANDING SEAM METAL ROOFING - "TEAL"
BY PAC-CLAD, HIGH SEAM PANEL

STOREFRONT SYSTEM:
ALL GLASS SHALL BE 1' LOW-E
INSULATED GLASS W/ALUMINUM FRAMES -
COLOR CLEAR ANODIZED ALUMINUM

NOTE:
ALL ELECTRICAL EQUIPMENT, AND DOORS ARE TO BE PAINTED TO MATCH ADJACENT WALLS.

GENERAL NOTES:

1. ALL STOREFRONT OPENINGS AND OVERHEAD DOORS SHALL RECEIVE A CORRUGATED GALVANIZED STEEL STORM PANEL SYSTEM WITH PERMANENT EXTRUDED ALUMINUM TRACK SYSTEM BY EASTERN METAL SUPPLY OR EQUAL. HURRICANE PANEL SUBCONTRACTOR SHALL SUBMIT AN COMPLETE ENGINEERED DESIGN TO THE CITY FOR REVIEW AND APPROVAL. SEE SPECIFICATIONS. BASIS OF DESIGN IS STORM PANEL SYSTEM BY STORM SOLUTIONS OF THE LOWCOUNTRY- (843) 227-1027 OR EQUAL.
2. GC TO PROVIDE 1 ATTIC DRAFTSTOP PER CODE TO SUBDIVIDE THE ATTIC INTO SPACES LESS THAN 3,000 SQ.FT.

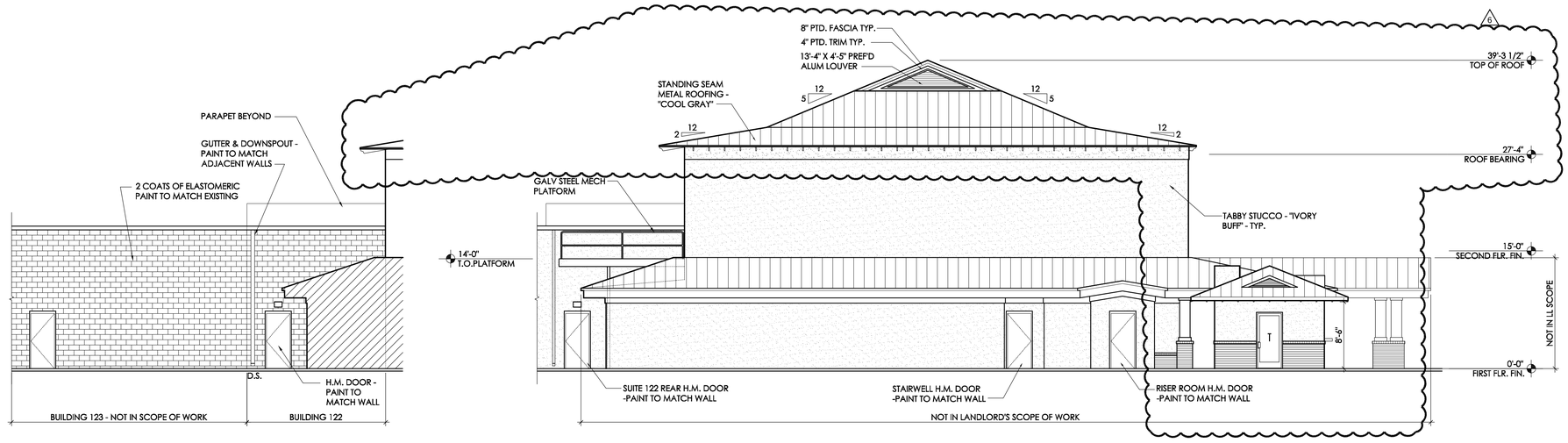

3 EAST ELEVATION BLDG 122
SCALE: 1/8" = 1'-0"

2 EAST ELEVATION
SCALE: 1/8" = 1'-0"

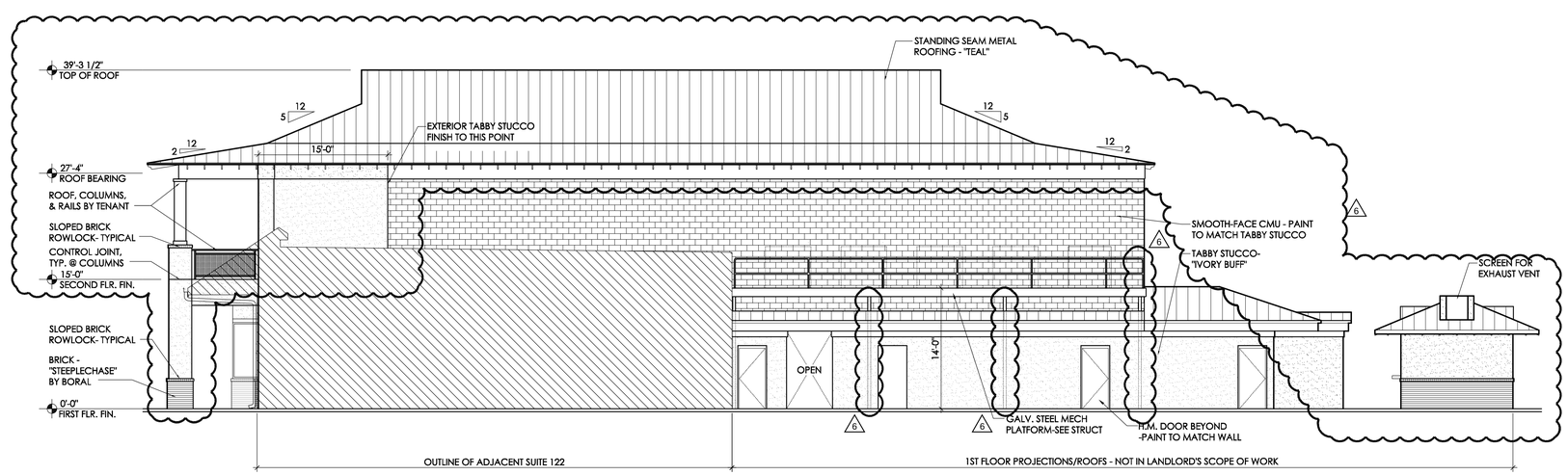

1 SOUTH ELEVATION
SCALE: 1/8" = 1'-0"

NARRAMORE ASSOCIATES, INC.
Architects & Planners
AMERICAN INSTITUTE OF ARCHITECTS

P.O. Box 8438 Greenville, SC 29604
310 Mills Ave. Greenville, SC 29605

Phone: 864.242.9881
Fax: 864.232.5202

plans@narramore-architects.com

©2014, NARRAMORE ASSOCIATES, INC.
COPYRIGHT PROTECTED BY FEDERAL LAW

SEAL

Blanchard & Calhoun COMMERCIAL
2743 PERIMETER PKWY
BLDG 100 STE 370
AUGUSTA, GA 30909

POSEIDON - BLDG. 121 & 122

38 SHELTER COVE LANE
HWY. 278, MILE MARKER 8
HILTON HEAD ISLAND, SC 29928

REVISIONS
1 02-06-14
2 02-14-14
3 02-25-14
4 03-10-14
6 04-14-14

DOCUMENT DATA
BUILDING 121
PROJECT NUMBER
13914
ISSUE DATE
01-10-14

SHELTER COVE
HILTON HEAD, SC

A2.1

EXTERIOR ELEVATION
BUILDING 121

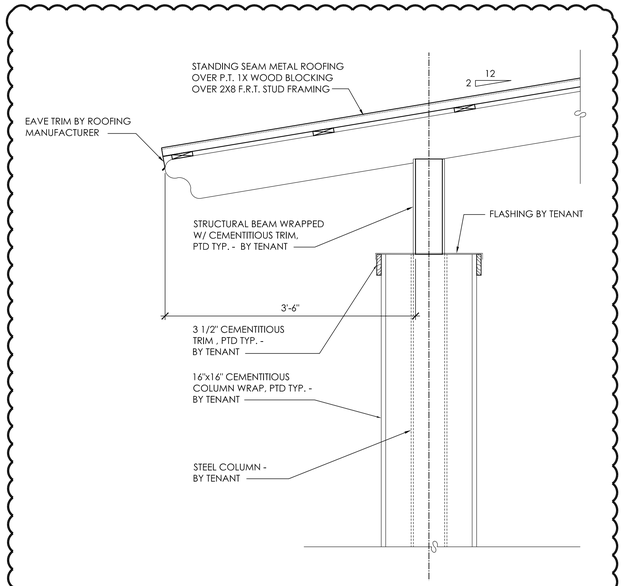

4 DETAIL
SCALE: 1" = 1'-0"

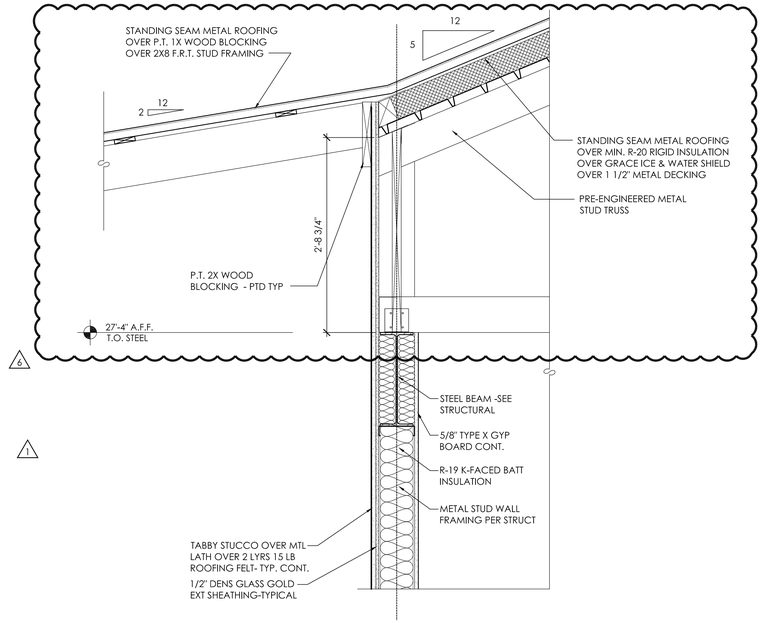

3 DETAIL
SCALE: 1" = 1'-0"

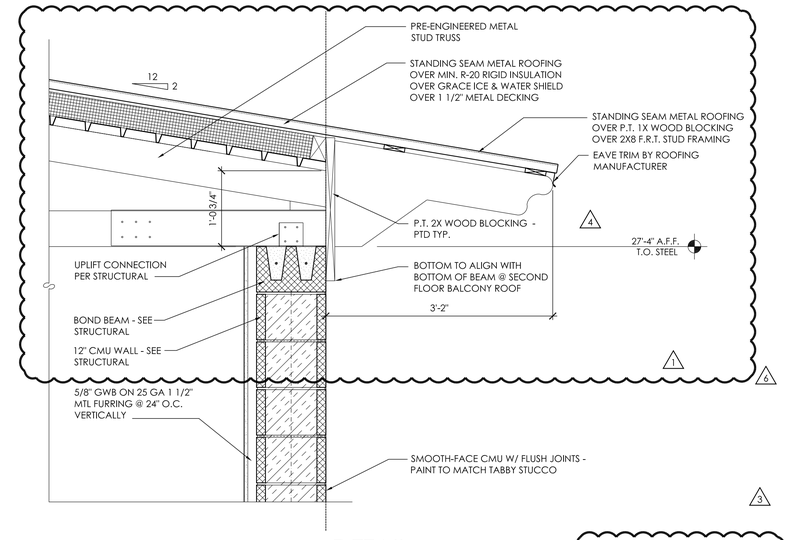

2 DETAIL
SCALE: 1" = 1'-0"

NOTE:
ALL WOOD FRAMING ON BALCONY
SHALL BE FIRE RESISTANT.

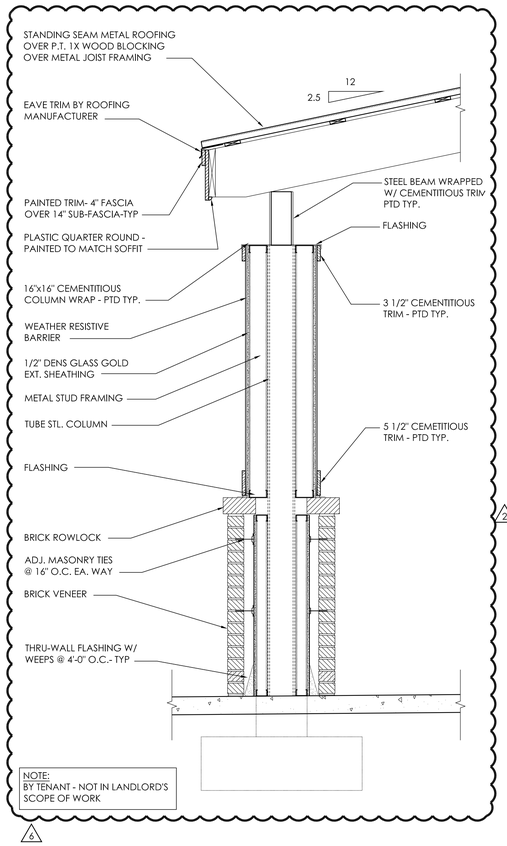

NOTE:
BY TENANT - NOT IN LANDLORD'S
SCOPE OF WORK

5 DETAIL
SCALE: 3/4" = 1'-0"

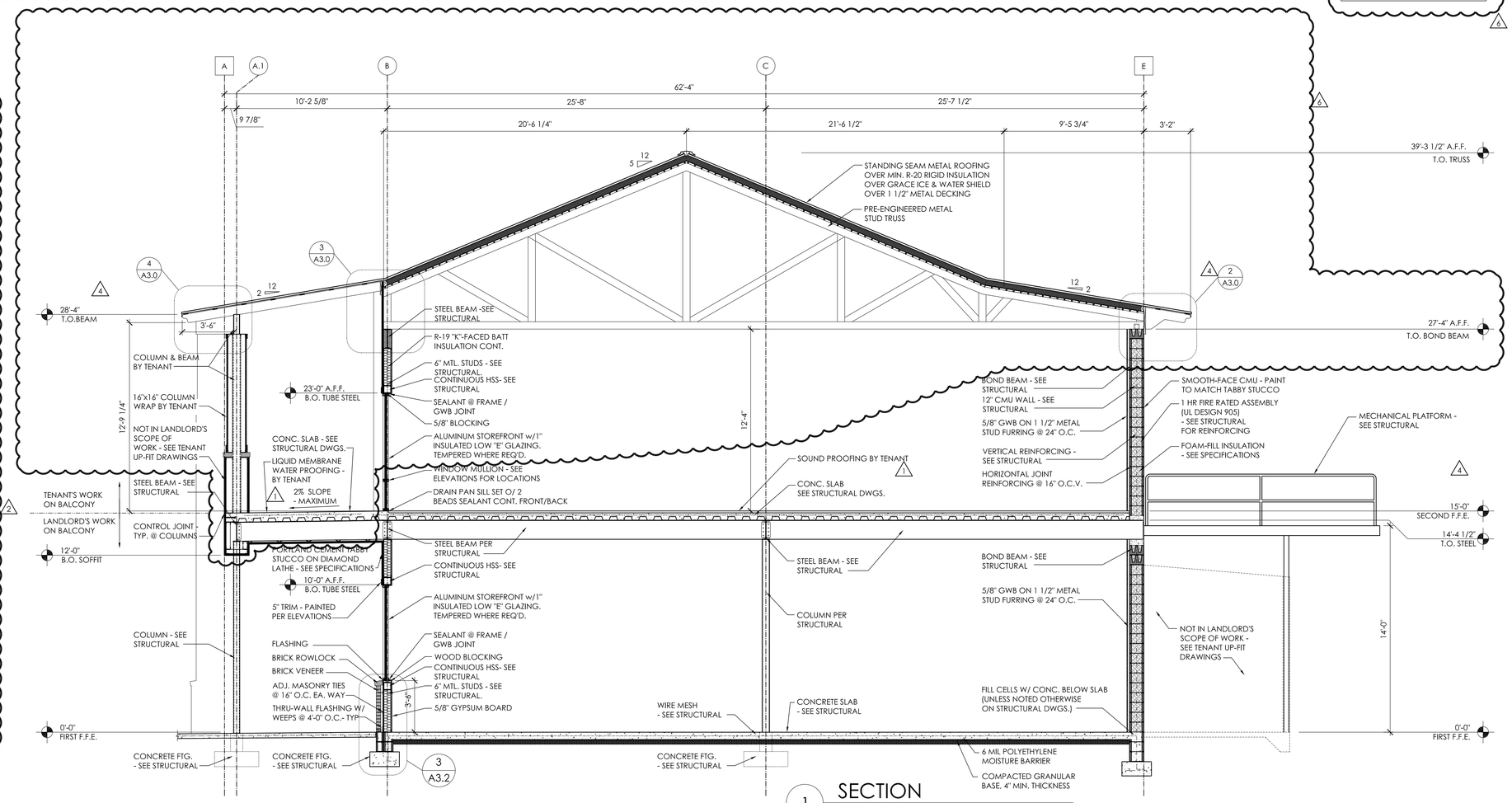

1 SECTION
SCALE: 1/4" = 1'-0"

NARRAMORE
ASSOCIATES, INC.
Architects & Planners
AMERICAN INSTITUTE OF ARCHITECTS
P.O. Box 8438 Greenville, SC 29604
310 Mills Ave. Greenville, SC 29605
Phone: 864.242.9881
Fax: 864.232.5202
plans@narramore-architects.com

©2014, NARRAMORE ASSOCIATES, INC.
COPYRIGHT PROTECTED BY FEDERAL LAW

SEAL

Blanchard & Calhoun COMMERCIAL
2743 PERIMETER PKWY
BLDG 100 STE 370
AUGUSTA, GA 30909

POSEIDON - BLDG. 121 & 122
38 SHELTER COVE LANE
HWY. 278, MILE MARKER 8
HILTON HEAD ISLAND, SC 29928

REVISIONS
1 02-06-14
2 02-14-14
3 02-25-14
4 03-10-14
5 04-14-14

DOCUMENT DATA
BUILDING 121
PROJECT NUMBER
13914
ISSUE DATE
01-10-14

SHELTER COVE
HILTON HEAD, SC
A3.0
BUILDING SECTIONS
BUILDING 121

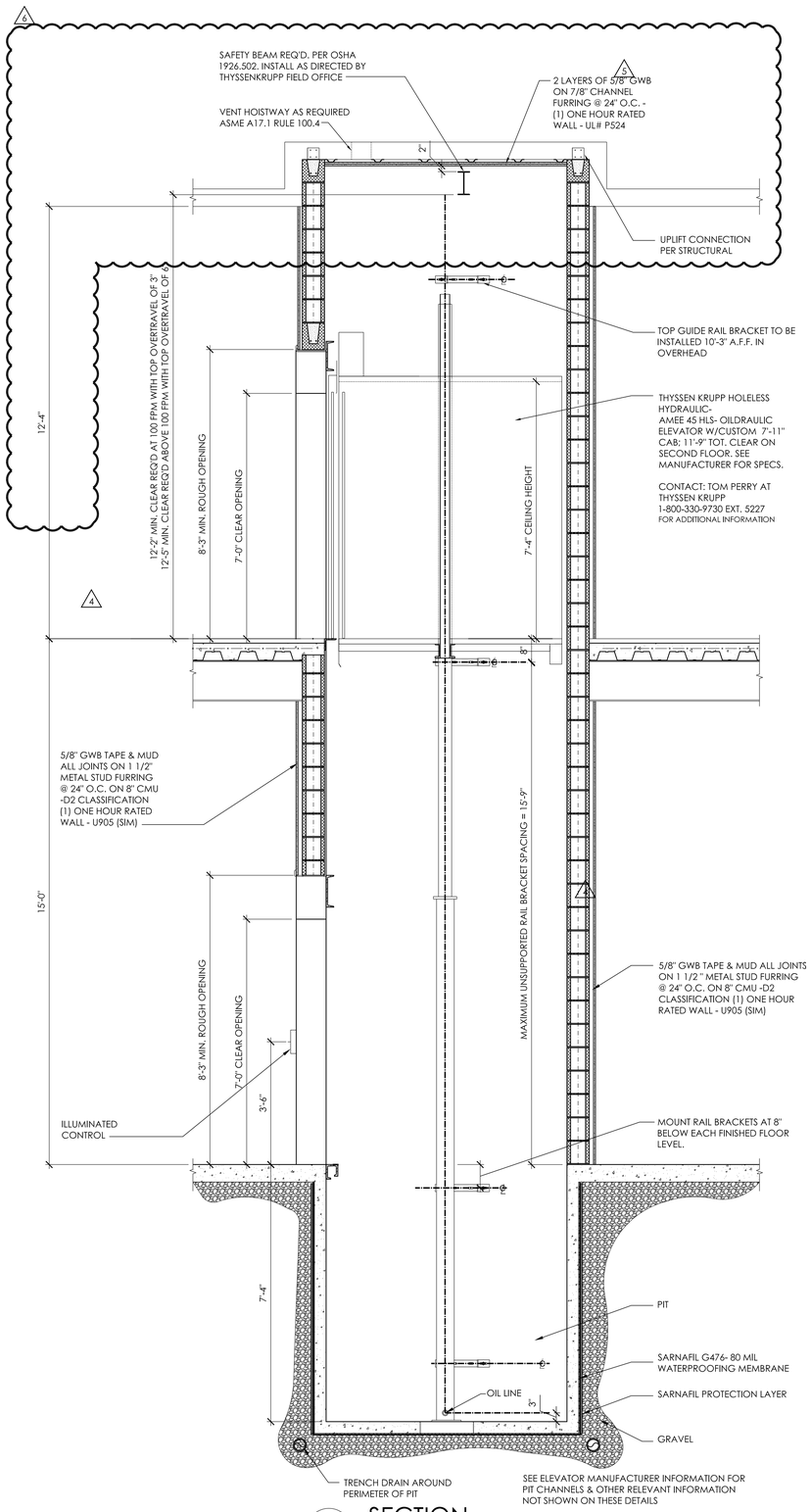

2 SECTION

SCALE: 1/2" = 1'-0"

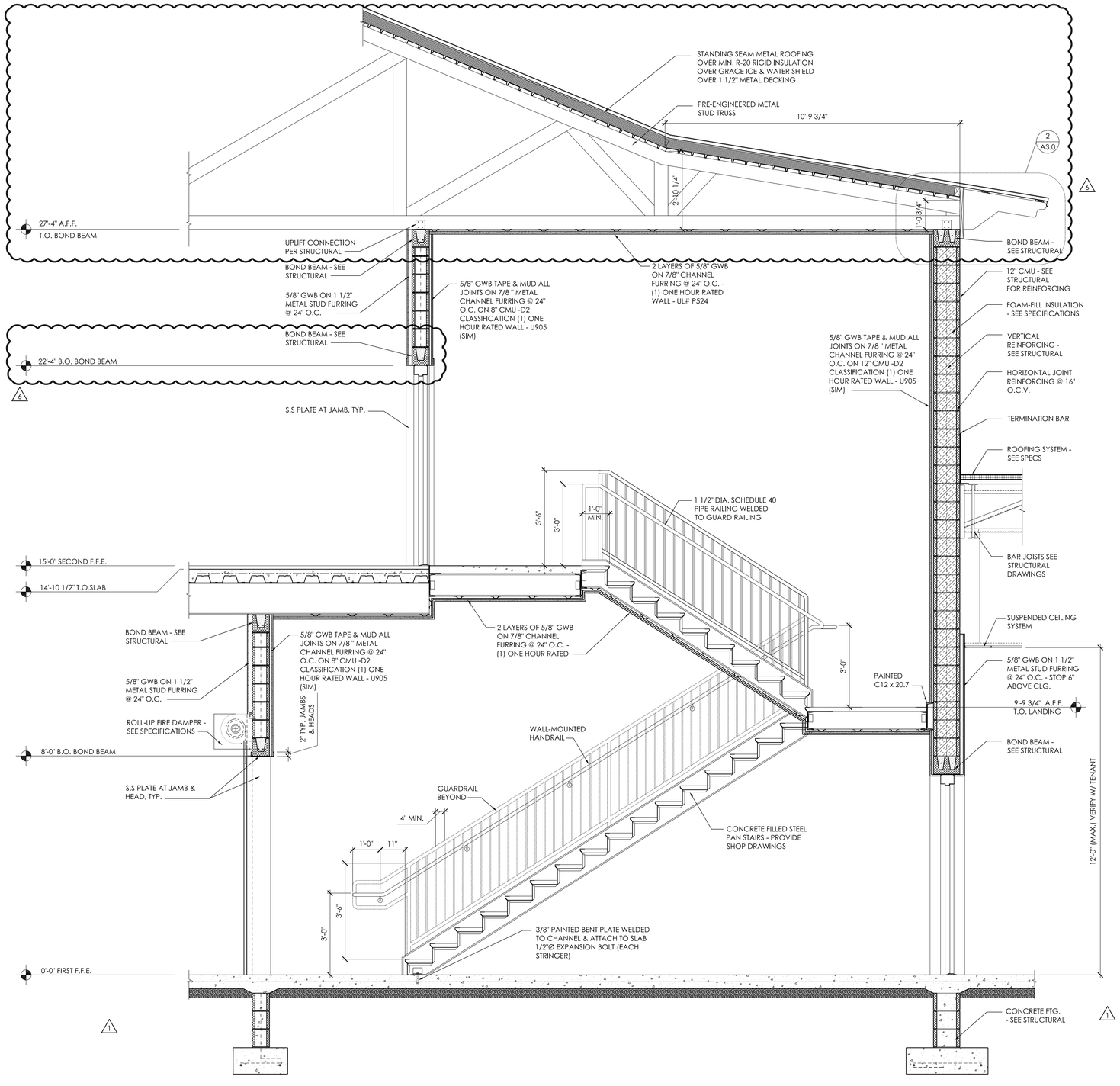

1 SECTION

SCALE: 1/2" = 1'-0"

NOTE:
ALL WOOD FRAMING ON BALCONY SHALL BE FIRE RESISTANT.

NARRAMORE ASSOCIATES, INC.
Architects & Planners
AMERICAN INSTITUTE OF ARCHITECTS
P.O. Box 8438 Greenville, SC 29604
310 Mills Ave. Greenville, SC 29605
Phone: 864.242.9881
Fax: 864.232.5202
plans@narramore-architects.com

©2014, NARRAMORE ASSOCIATES, INC.
COPYRIGHT PROTECTED BY FEDERAL LAW

SEAL

Blanchard & Calhoun COMMERCIAL
2743 PERIMETER PKWY
BLDG 100 STE 370
AUGUSTA, GA 30909

POSEIDON - BLDG. 121 & 122
38 SHELTER COVE LANE
HWY. 278, MILE MARKER 8
HILTON HEAD ISLAND, SC 29928

REVISIONS
1 02-06-14
4 03-10-14
5 03-27-14
6 04-14-14

DOCUMENT DATA
BUILDING 121
PROJECT NUMBER
13914
ISSUE DATE
01-10-14

SHELTER COVE
HILTON HEAD, SC

A3.1

BUILDING SECTIONS
BUILDING 121

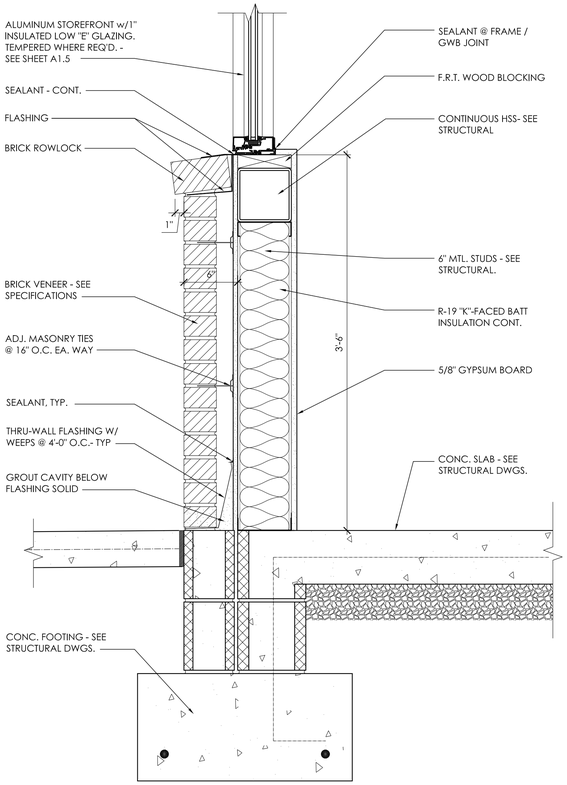

3 DETAIL
SCALE: 1 1/2" = 1'-0"

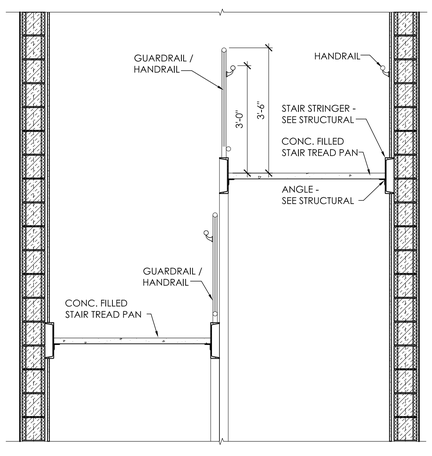

2 SECTION
SCALE: 3/4" = 1'-0"

NOTE:
ALL WOOD FRAMING ON BALCONY SHALL BE FIRE RESISTANT.

6

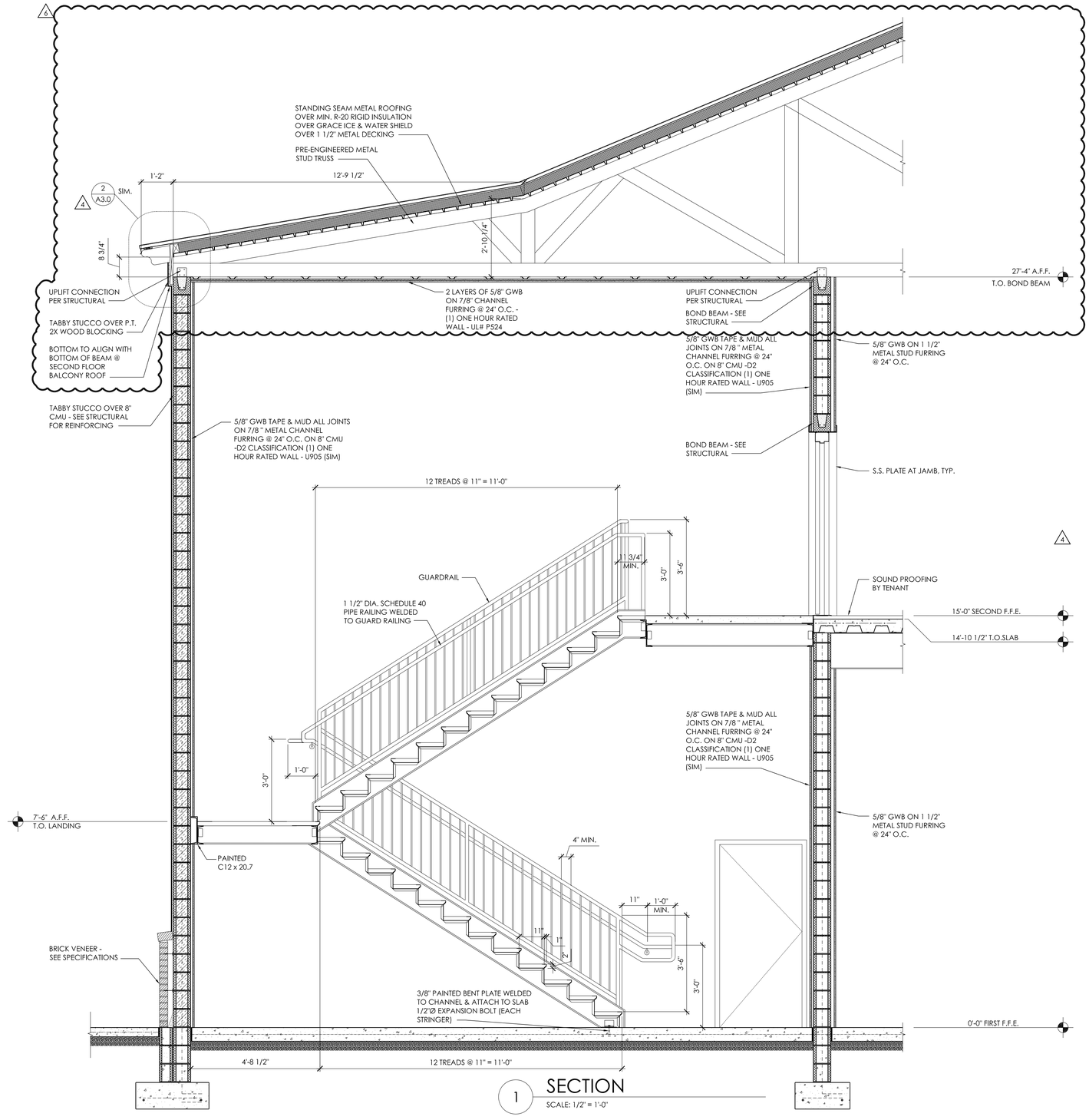

1 SECTION
SCALE: 1/2" = 1'-0"

NARRAMORE ASSOCIATES, INC.
Architects & Planners
AMERICAN INSTITUTE OF ARCHITECTS
P.O. Box 8438 Greenville, SC 29604
310 Mills Ave. Greenville, SC 29605
Phone: 864.242.9881
Fax: 864.232.5202
plans@narramore-architects.com
©2014, NARRAMORE ASSOCIATES, INC.
COPYRIGHT PROTECTED BY FEDERAL LAW

SEAL

Blanchard & Calhoun COMMERCIAL
2743 PERIMETER PKWY
BLDG 100 STE 370
AUGUSTA, GA 30909

POSEIDON - BLDG. 121 & 122
38 SHELTER COVE LANE
HWY. 278, MILE MARKER 8
HILTON HEAD ISLAND, SC 29928

REVISIONS
4 03-10-14
5 04-14-14

DOCUMENT DATA
BUILDING 121
PROJECT NUMBER
13914
ISSUE DATE
01-10-14

SHELTER COVE
HILTON HEAD, SC

A3.2

BUILDING SECTIONS
BUILDING 121

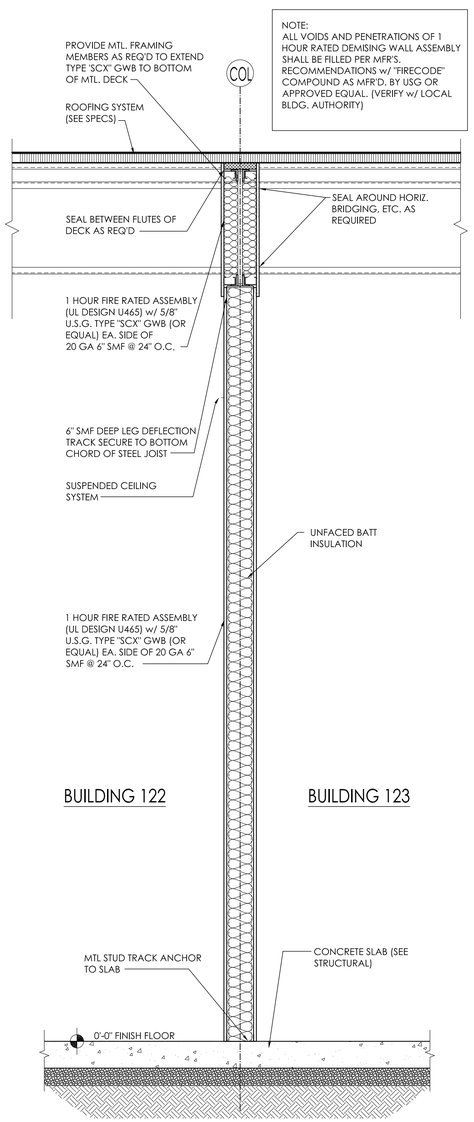

3 1 HR DEMISING WALL UL ASSEMBLY: U465

SCALE: 3/4" = 1'-0"

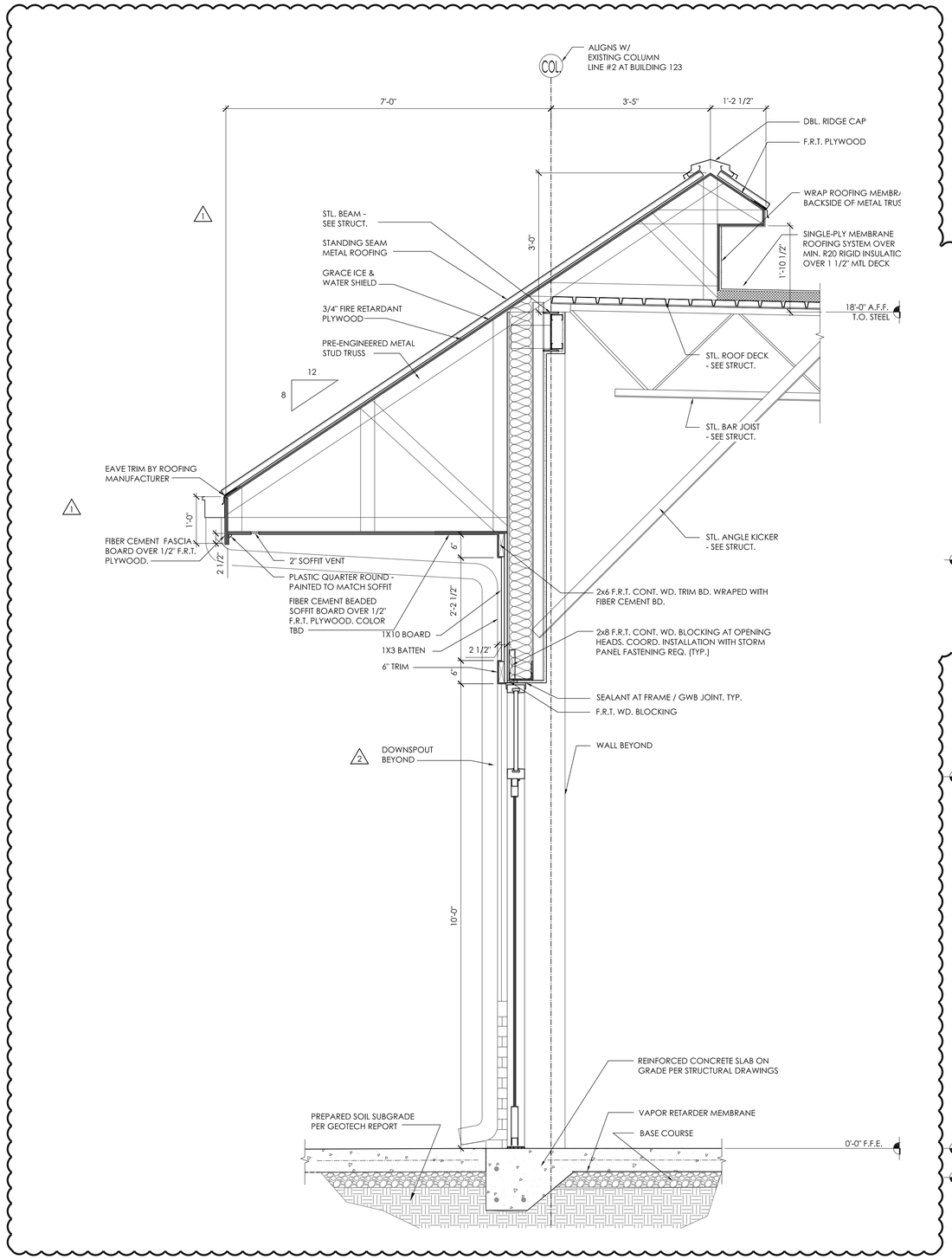

2 SECTION

SCALE: 3/4" = 1'-0"

NOTE:
ALL WOOD FRAMING ON BALCONY SHALL BE FIRE RESISTANT.

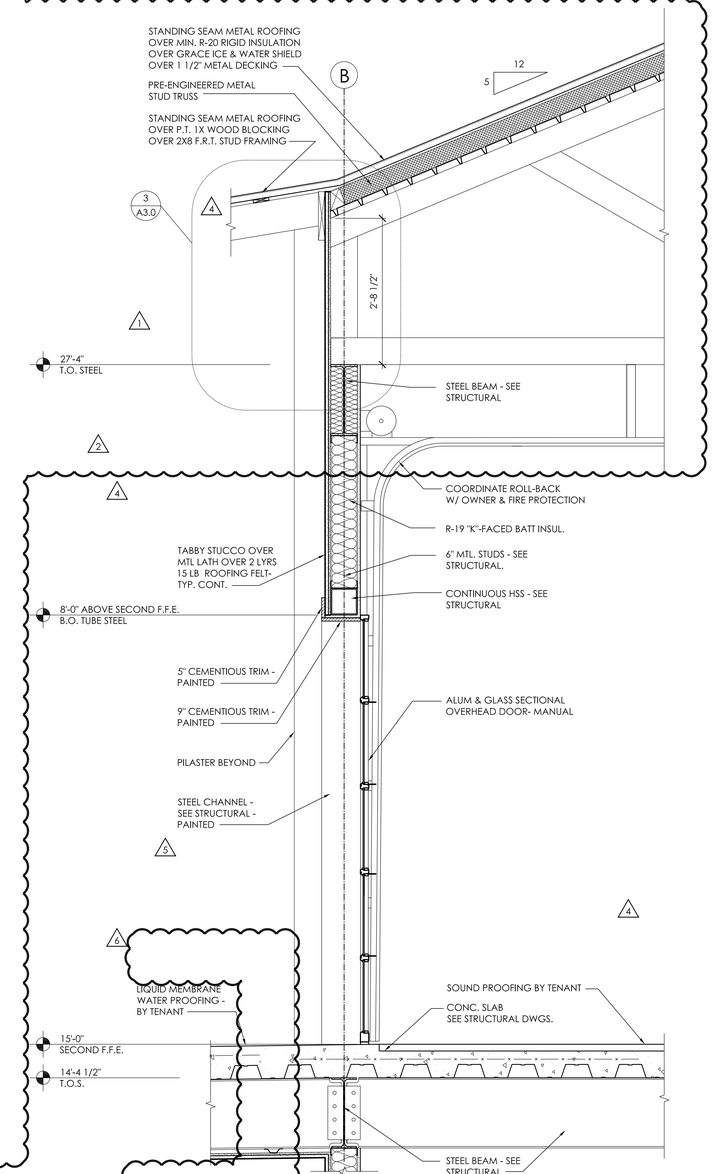

1 SECTION

SCALE: 3/4" = 1'-0"

NARRAMORE ASSOCIATES, INC.
Architects & Planners
AMERICAN INSTITUTE OF ARCHITECTS
P.O. Box 8438 Greenville, SC 29604
310 Mills Ave. Greenville, SC 29605
Phone: 864.242.9881
Fax: 864.232.5202
plans@narramore-architects.com

©2014, NARRAMORE ASSOCIATES, INC.
COPYRIGHT PROTECTED BY FEDERAL LAW

SEAL

Blanchard & Calhoun COMMERCIAL
2743 PERIMETER PKWY
BLDG 100 STE 370
AUGUSTA, GA 30909

POSEIDON - BLDG. 121 & 122
38 SHELTER COVE LANE
HWY. 278, MILE MARKER 8
HILTON HEAD ISLAND, SC 29928

REVISIONS
1 02-06-14
2 02-14-14
3 02-25-14
4 03-10-14
5 03-27-14
6 04-14-14

DOCUMENT DATA
BUILDING 121
PROJECT NUMBER
13914
ISSUE DATE
01-10-14

SHELTER COVE
HILTON HEAD, SC

A3.3

BUILDING SECTIONS
BUILDING 121 & 122

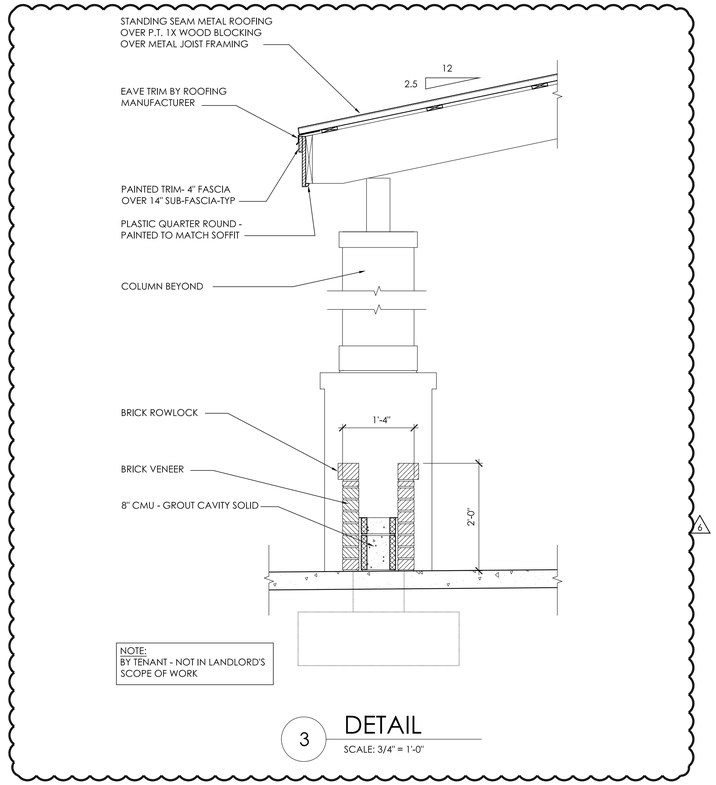

3 DETAIL

SCALE: 3/4" = 1'-0"

2 NON-RATED WALL SECTION

SCALE: 3/4" = 1'-0"

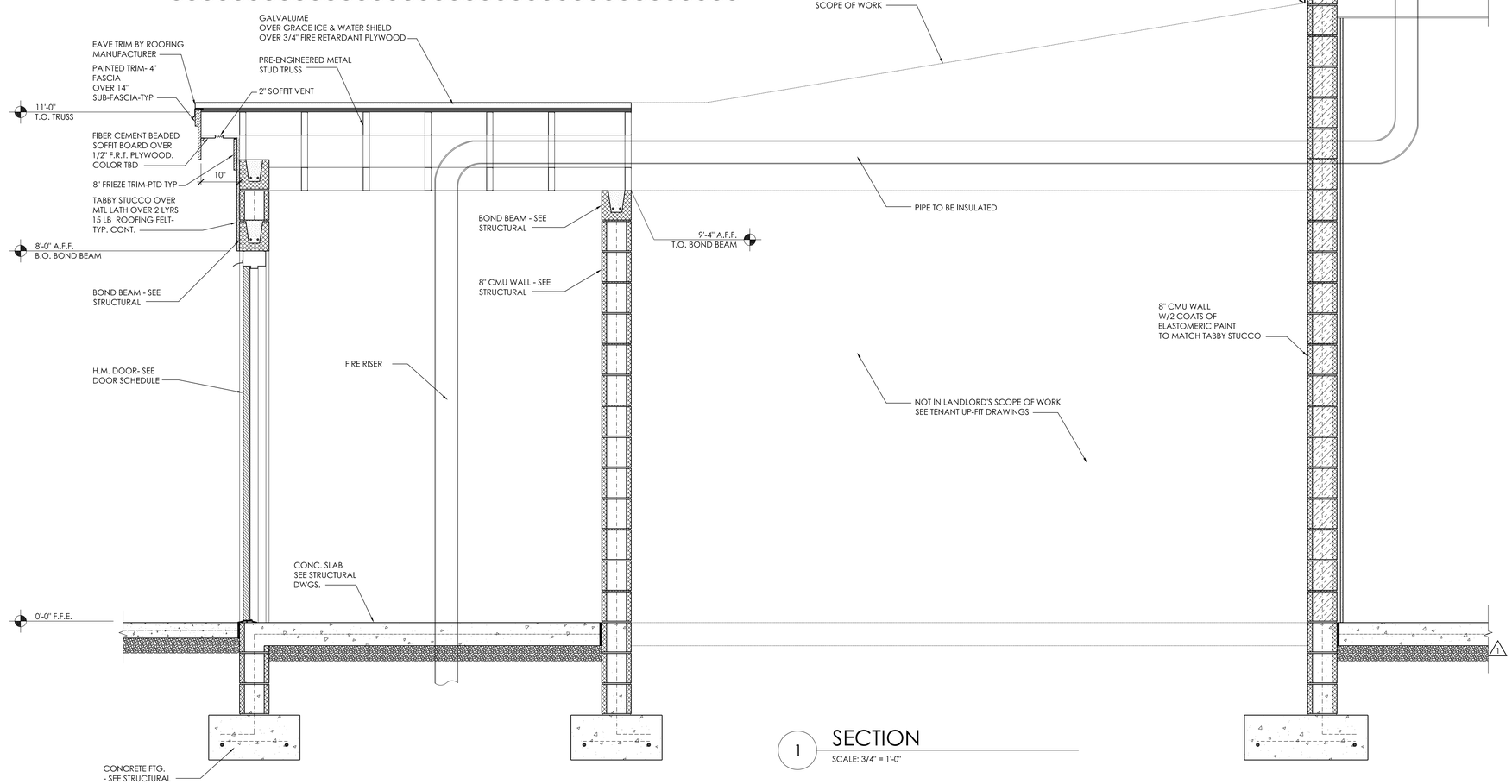

1 SECTION

SCALE: 3/4" = 1'-0"

NARRAMORE
ASSOCIATES, INC.
Architects & Planners
AMERICAN INSTITUTE OF ARCHITECTS

P.O. Box 8438 Greenville, SC 29604
310 Mills Ave. Greenville, SC 29605

Phone: 864.242.9881
Fax: 864.232.5202

plans@narramore-architects.com

©2014, NARRAMORE ASSOCIATES, INC.
COPYRIGHT PROTECTED BY FEDERAL LAW

SEAL

Blanchard & Calhoun COMMERCIAL

2743 PERIMETER PKWY
BLDG 100 STE 370
AUGUSTA, GA 30909

POSEIDON - BLDG. 121 & 122

38 SHELTER COVE LANE
HWY. 278, MILE MARKER 8
HILTON HEAD ISLAND, SC 29928

REVISIONS

1 02-06-14
6 04-14-14

DOCUMENT DATA
BUILDING 121
PROJECT NUMBER
13914
ISSUE DATE
01-10-14

SHELTER COVE
HILTON HEAD, SC

A3.4

BUILDING SECTIONS
BUILDING 121 & 122

GENERAL ELECTRICAL NOTES:

1. SEE OVERALL ELECTRICAL DRAWING E1 FOR ELECTRICAL LEGEND, DETAILS, & SCHEDULES.
2. ELECTRICAL SUBCONTRACTORS SHALL VERIFY WITH LOCAL AUTHORITIES REQUIREMENTS FOR DUPLEX OUTLETS SHOWN ABOVE STOREFRONT (AS PER NEC 210.62) PRIOR TO WIRING AND INSTALLATION. CREDIT SHALL BE MADE TO THE OWNER IN THE EVENT SUCH OUTLETS ARE NOT REQUIRED.
3. ALL ELECTRICAL WORK INCLUDING CONDUIT, WIRE, LIGHTING, PANEL BOARDS, ETC. SHALL BE BY A LICENSED REPRESENTATIVE OF THE ELECTRICAL CONTRACTOR & INSPECTED PRIOR TO COVERING.
4. WIRING LOCATED ABOVE A SUSPENDED CEILING SHALL NOT BE SUPPORTED BY THE CEILING ASSEMBLY INCLUDING SUPPORT WIRES, UNLESS TESTED AS PART OF THE ASSEMBLY.
5. FLEXIBLE CORDS AND CABLES SHALL NOT BE PERMITTED ABOVE A SUSPENDED OR DROP CEILING.
6. LIGHTING FIXTURES LOCATED WITHIN SUSPENDED CEILING SYSTEMS SHALL BE SECURELY FASTENED TO THE CEILING FRAMING BY MECHANICAL MEANS. THE FRAMING MEMBERS OF THE SUSPENDED CEILING SYSTEM USED TO SUPPORT THE FIXTURE SHALL BE SECURELY FASTENED TO EACH OTHER AND SHALL BE SECURELY ATTACHED TO THE BUILDING STRUCTURE AT APPROPRIATE INTERVALS.
7. CIRCUIT BREAKERS FOR LIGHTING CIRCUITS & TENANT SIGN SHALL BE RATED FOR SWITCHING DUTY.
8. CIRCUITING SHOWN FOR H.V.A.C. UNITS IS BASED UPON A TYPICAL UNIT OF INDICATED TONNAGE. THE EXACT CIRCUIT SIZE AND ARRANGEMENT REQUIRED FOR THE H.V.A.C. EQUIPMENT INSTALLED MAY VARY SOMEWHAT FROM THE INDICATED. THE CONTRACTOR SHALL COORDINATE REQUIREMENTS AND ADJUST CIRCUIT ACCORDINGLY.
9. PROVIDE 1" CONDUIT, JUNCTION BOX, AND COVER PLATE FOR ALARM/STROBE MTD. +86"A.F.F.
10. THE METAL GAS PIPING SYSTEM SHALL BE ELECTRICALLY CONTINUOUS AND BONDED TO THE GROUNDING ELECTRODE.
11. ALL BRANCH CIRCUITS, FEEDERS, AND DISCONNECTS SHALL BE LEGIBLY LABELED TO INDICATE ITS PURPOSE. THE MARKING SHALL BE OF SUFFICIENT DURABILITY TO WITHSTANDING THE ENVIRONMENT INVOLVED.
12. CONTRACTOR SHALL VERIFY SERVICE AND ORDER PANELS AS TOP OR BOTTOM FED DEPENDING ON THE ACTUAL ROUTING OF FEEDER AS DETERMINED IN FIELD.
13. 25,000 AIC IS APPROXIMATE ONLY. CONTRACTOR TO OBTAIN SHORT-CIRCUIT INFORMATION FROM LOCAL POWER UTILITY TO DETERMINE EXACT RATING REQUIRED.
14. LISTED OR LABELED EQUIPMENT SHALL BE USED AND INSTALLED IN ACCORDANCE WITH ANY INSTRUCTIONS INCLUDED IN THE LISTING OR LABELING.
15. SWITCH TWO LAMPS IN EACH FIXTURE SEPARATELY IN SALES FOR BI-LEVEL LIGHTING.

GENERAL MECHANICAL NOTES:

1. SEE MECHANICAL DRAWINGS FOR HVAC INFORMATION.
2. H.V.A.C. SYSTEMS SHALL MEET THE REQUIREMENTS OF ASHRAE 62. VENTILATION RATE HAS BEEN ESTABLISHED AT 15 CFM PER PERSON FOR RETAIL SPACE. CHANGE INSPACE USE CONTAMINATES OR OPERATION MAY REQUIRE A RE-EVALUATION OF THE DESIGN AND IMPLEMENTATION OF NEEDED CHANGES.
2. PROVIDE SMOKE DECTECTOR IN DUCTWORK TO SHUT DOWN HVAC UNIT IN ALRAM (AS REQUIRED BY CODE).

RTU
3 TON ROOFTOP GAS H.V.A.C. UNIT
208-230/3Ø/60

M.C.A. = 45
M.O.C.P. = 45

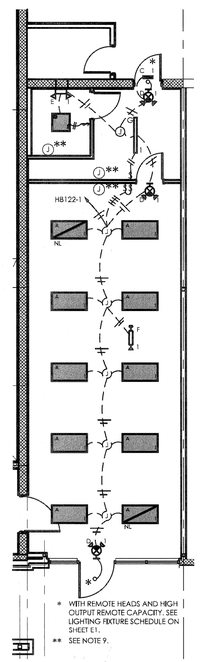

4 LIGHTING PLAN
SCALE: 1/8" = 1'-0"

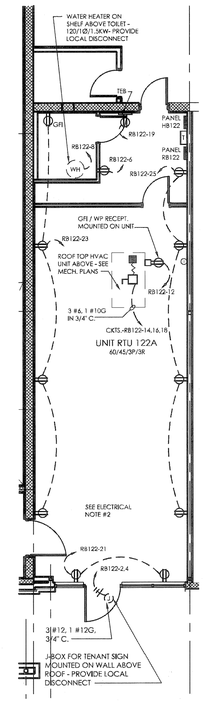

3 POWER PLAN
SCALE: 1/8" = 1'-0"

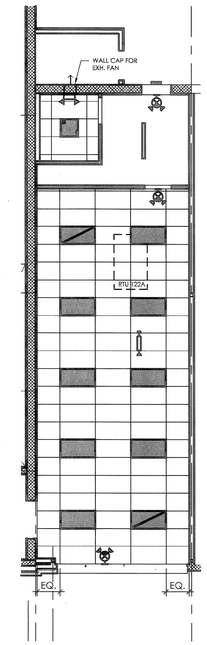

2 REFLECTED CEILING PLAN
SCALE: 1/8" = 1'-0"

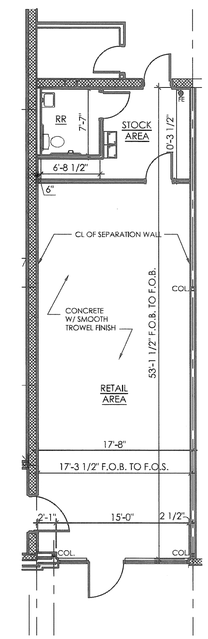

1 FLOOR PLAN
SCALE: 1/8" = 1'-0"

PANELBOARD SCHEDULE

PANEL RB122 TYPE: SQUARE 'D' 120/208 VOLTS 3 ϕ 4 W
MOUNTING: SURFACE QO LOADCENTER 100 AMP MAIN CKT. BKR.

BRANCH BREAKERS

ITEM	AMP RATING	POLE	CIR NO	PHASE LOADING A		PHASE LOADING B		PHASE LOADING C		CIR NO	AMP RATING	POLE	ITEM
SPARE	20	1	1	-	1000					2	20	2	TENANT SIGN
SPARE	20	1	3			-	1000			4			
SPARE	20	1	5					-	1000	6	20	1	EWC
SPARE	20	1	7	-	1500					8	20	1	WATER HEATER
SPARE	20	1	9			-	-			10	20	1	SPARE
SPARE	20	1	11					-	180	12	20	1	RECEPTACLE (ROOFTOP)
SPARE	20	1	13	-	5400					14	45	3	ROOFTOP HEATING & AC RTU 122A 3 TONS - HACR RATED
SAPRE	20	1	15			-	5400			16			
SPARE	20	1	17					-	5400	18			
RECEPTACLE (TEL. BD.)	20	1	19	500	-					20			SPACE
RECEPTACLE (STOREF.)	20	1	21			600	-			22			SPACE
RECEPTACLES	20	1	23					720	-	24			SPACE
RECEPTACLES	20	1	25	720	-					26			SPACE
SPACE			27			-	-			28			SPACE
SPACE			29					-	-	30			SPACE
				1220	7900	600	6400	720	6580				
				9120		7000		7300					

FEEDER 4 #6 & 1#8G, 1" C
TOTAL CONN. LOAD 23420 VA's
CONNECTED 65.1 AMPS
INTEGRATED EQUIP. RATING 25,000 AMPS RMS. SYM.
APPROX. DEMAND = 22249 V.A. = 61.8 AMPS

PANEL TO BE RATED FOR SERVICE ENTRANCE

PANELBOARD SCHEDULE

PANEL HB122 TYPE: SQUARE 'D' 277/480 VOLTS 3 ϕ 4 W
MOUNTING: SURFACE QO LOADCENTER 100 AMP MAIN CKT. BKR.

BRANCH BREAKERS

ITEM	AMP RATING	POLE	CIR NO	PHASE LOADING A		PHASE LOADING B		PHASE LOADING C		CIR NO	AMP RATING	POLE	ITEM
LIGHTS	20	1	1	1650	9120					2	45	3	PANEL RB122
SPACE			3			-	7000			4			
SPACE			5					-	7300	6			
SPACE			7	-	-					8			SPACE
SPACE			9			-	-			10			SPACE
SPACE			11					-	-	12			SPACE
SPACE			13	-	-					14			SPACE
SPACE			15			-	-			16			SPACE
SPACE			17					-	-	18			SPACE
SPACE			19	-	-					20			SPACE
SPACE			21			-	-			22			SPACE
SPACE			23					-	-	24			SPACE
SPACE			25	-	-					26			SPACE
SPACE			27			-	-			28			SPACE
SPACE			29					-	-	30			SPACE
				1650	9120	-	7000	-	7300				
				10770		7000		7300					

FEEDER 4 #1 & 1#6G, IN EXISTING U/G CONDUIT
TOTAL CONN. LOAD 25070 VA's
CONNECTED 30.2 AMPS
INTEGRATED EQUIP. RATING 25,000 AMPS RMS. SYM.
APPROX. DEMAND = 23817 V.A. = 28.7 AMPS

* EQUIP W/ LOCK-ON DEVICE

PANEL TO BE RATED FOR SERVICE ENTRANCE

SYMBOL LEGEND

- WALL MOUNTED EXIT LIGHT / EMERGENCY LIGHT
- 2 X 4 RECESSED FLUORESCENT LIGHT FIXTURE
- FLUORESCENT FIXTURE WIRED AS NIGHTLIGHT
- 2 X 2 RECESSED FLUORESCENT LIGHT FIXTURE
- WALL MOUNTED 6VDC EMERGENCY LIGHTING UNIT
- RECESSED CEILING MOUNTED 6VDC EMERGENCY LIGHTING UNIT
- 4' FLUORESCENT STRIP FIXTURE
- WALL PACK
- DUPLEX RECEPTACLE, 16" A.F.F.

GENERAL NOTES:

1. FOR ALL UNIT PLAN DIMENSIONS REFER TO SHEET A1.0 & A1.1.
2. SEE DRAWING A1.4 FOR DOOR AND HARDWARE SCHEDULE.
3. SEE DRAWING A1.7 FOR ENLARGED TOILET PLANS AND DETAILS.

STATE OF SOUTH CAROLINA
NARRAMORE ASSOCIATES, A.I.A. ARCHITECTS, INC.
GREENVILLE, SC
B84033
REGISTERED ARCHITECTS

960 S.F. BUILDING 122

ROOM FINISH SCHEDULE

SPACE	FLOOR	BASE	WALLS	CEILING MATERIAL	CEILING HEIGHT
SALES AREA	SEALED CONC. SLAB	NONE	GYP. BD. PRIMED **	SUSP. ACOUST. TILE	12'-0"
STOCKROOM	SEALED CONC. SLAB	NONE	GYP. BD. PRIMED **	NONE	
RESTROOMS	SEALED CONC. SLAB	NONE	GYP. BD. PRIMED **	SUSP. ACOUST. TILE	9'-0"

* VERIFY WITH TENANT REQUIREMENTS
** GYPSUM BOARD TO BE TAPED, BEDDED, AND PRIMED FOR TENANT'S FINAL FINISH.

NARRAMORE ASSOCIATES, INC.
Architects & Planners
AMERICAN INSTITUTE OF ARCHITECTS
P.O. Box 8438 Greenville, SC 29604
310 Mills Ave. Greenville, SC 29605
Phone: 864.242.9881
Fax: 864.232.5202
plans@narramore-architects.com

©2014, NARRAMORE ASSOCIATES, INC.
COPYRIGHT PROTECTED BY FEDERAL LAW

SEAL
STATE OF SOUTH CAROLINA
DAVID L. NARRAMORE
GREENVILLE, SC
1402
REGISTERED ARCHITECT
2/7/14

Blanchard & Calhoun COMMERCIAL
2743 PERIMETER PKWY
BLDG 100 STE 370
AUGUSTA, GA 30909

POSEIDON - BLDG. 121 & 122
38 SHELTER COVE LANE
HWY. 278, MILE MARKER 8
HILTON HEAD ISLAND, SC 29928

REVISIONS
1 02-06-14

DOCUMENT DATA
BUILDING 121
PROJECT NUMBER
13914
ISSUE DATE
01-10-14

SHELTER COVE
HILTON HEAD, SC
A6.0
UNIT PLAN
BUILDING 122

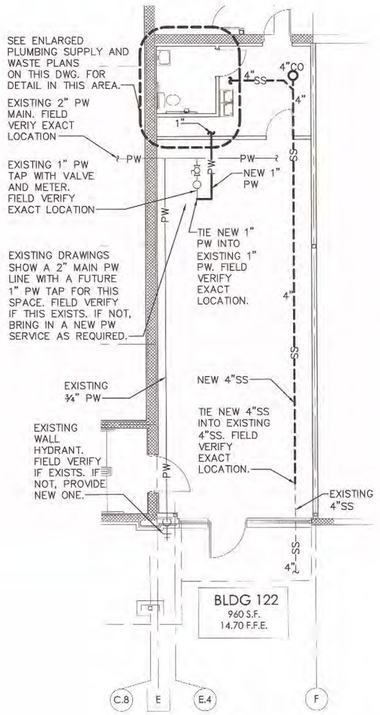

PLUMBING PLAN

SCALE : 1/8" = 1'-0"

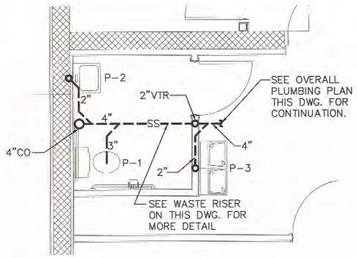

ENLARGED PLUMBING WASTE PLAN

SCALE : 1/4" = 1'-0"

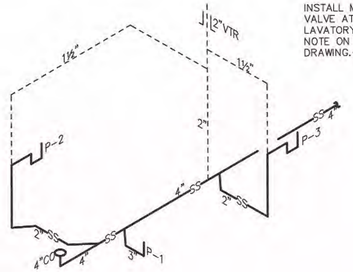

WASTE RISER DIAGRAM

SCALE : NONE

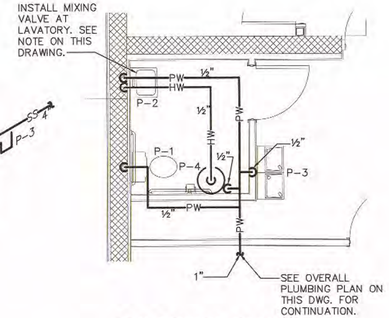

ENLARGED PLUMBING SUPPLY PLAN

SCALE : 1/4" = 1'-0"

PLUMBING FIXTURE SCHEDULE

NO.	FIXTURE	CW	HW	WASTE	TRAP	
P-1	ADA WATER CLOSET	1/2"	–	3"	–	EQUAL TO AMERICAN STANDARD "CADET RIGHT HEIGHT" 2998.012 VITREOUS CHINA, FLOOR MOUNTED, ELONGATED BOWL, AQUAFORCE FLUSHING TECHNOLOGY, RIM 16–1/2" ABOVE FLOOR FOR WHEELCHAIR USE, BOLT CAPS, CLOSE–COUPLED TANK WITH 1.6 GPF TRIM, LEVER ASSEMBLY AND TANK COVER. FURNISH WITH OPEN FRONT INJECTION MOLDED SOLID PLASTIC SEAT WITH COVER – BEMIS 1950; MCGUIRE STANDARD SERIES CLOSET SUPPLY KIT WITH BRASS STEM; PVC FLOOR FLANGE.
P-2	WALL MOUNT ADA LAVATORY	1/2"	1/2"	1½"	1¼"	EQUAL TO AMERICAN STANDARD "LUCERNE" 0355.012 20½"x18¼" WALL MOUNT, WITH DELTA NO. 523–WFHGMHDF SINGLE LEVER FAUCET WITH 0.5 GPM FLOW DEVICE; MCGUIRE STANDARD SERIES SUPPLIES AND STOPS WITH BRASS STEMS; MCGUIRE 1–1/4" PREWRAPPED DRAIN ASSEMBLY, 17 GA. P–TRAP AND WALL BEND; SUPPLY RISER TUBE COVER, WHEEL HANDLE COVER, AND SUPPLY COVER. COLOR BY ARCHITECT.
P-3	ADA WATER COOLER	1/2"	–	1½"	1¼"	EQUAL TO OASIS NO. PBACSL BARRIER–FREE SPLIT–LEVEL COOLER. FURNISH 1–1/4" P–TRAP AND MCGUIRE STANDARD SERIES SUPPLY AND STOP WITH BRASS STEM. FURNISH #035174 APRON (COLOR SELECTED BY ARCHITECT).
P-4	WATER HEATER	SEE PLANS	SEE PLANS	–	–	ELECTRIC WATER HEATER EQUAL TO A.O. SMITH MODEL DEL–10 WATER HEATER, 10 GALLON TANK, 1500 WATT ELEMENT, 120V/1/60. FURNISH WITH WATTS VACUUM RELIEF VALVE ON COLD WATER RISER. PROVIDE SAFETY DRAIN PAN AND DRAIN LINE.

FLOOR CLEANOUTS: EQUAL TO ZURN MODEL ZB–1400–BP "LEVEL–TROL" ADJUSTABLE FLOOR CLEANOUT, CLEANOUT SIZE SHALL MATCH LINE SIZE. PROVIDE ACCESSORIES SUCH AS CARPET MARKER OR TILE RECESS AS REQUIRED TO MATCH FLOOR FINISH.

WALL CLEANOUTS: EQUAL TO ZURN MODEL Z–1441 WALL CLEANOUT WITH CAST IRON BODY, ABS PLUG AND STAINLESS STEEL ACCESS COVER WITH SECURING SCREW. CLEANOUT SIZE SHALL MATCH LINE SIZE.

EXTERIOR CLEANOUTS: EQUAL TO ZURN MODEL Z–1400–BP–HD "LEVEL–TROL" ADJUSTABLE FLOOR CLEANOUT. CLEANOUT SIZE SHALL MATCH LINE SIZE.

WATER HAMMER ARRESTORS: EQUAL TO ZURN Z–1700 SERIES "SHOKTROL", SIZE TO BE ACCORDING TO MANUFACTURER'S RECOMMENDATIONS.

WATER PRESSURE REDUCING STATION (PRV): EQUAL TO WATTS NO. 25AUB.

TRAP PRIMER VALVE: EQUAL TO PRECISION PLUMBING PRODUCTS PR–500 OR ULP–500LP.

ANTI–FREEZE WALL HYDRANT: EQUAL TO JOSAM 71050 NON–FREEZE TYPE WITH 3/4" H.P.T. OUTLET, VACUUM/BACKFLOW PREVENTER AND PRESSURE RELIEF VALVE, LENGTH TO SUIT WALL THICKNESS MOUNTED 18" ABOVE GRADE.

PLUMBING LEGEND

—PW—	POTABLE WATER
— —PW— —	POTABLE WATER BURIED
—HW—	POTABLE HOT WATER
—THW—	TEMPERED HOT WATER
—SS—	SANITARY SEWER
— —SS— —	SANITARY SEWER BURIED
– – – – – –	VENT
—NG—	NATURAL GAS
V	VENT
VTR	VENT–THRU–ROOF
	CHECK VALVE
	UNION
	SHUT–OFF VALVE
	GAS SHUT–OFF VALVE
CO	FLOOR CLEANOUT
WCO	WALL CLEANOUT
RD	ROOF DRAIN
ORD	OVERFLOW ROOF DRAIN
SD	PRIMARY STORM DRAIN
OSD	OVERFLOW STORM DRAIN
RDL	ROOF DRAIN LEADER
ORDL	OVERFLOW ROOF DRAIN LEADER

MIXING VALVE – WATTS MODEL MMV, ½", 4.0 PSI PRESSURE DROP AT 2.0 GPM WITH RANGE TEMPERATURE OF 80°F TO 120°F, SET VALVE AT A MAXIMUM 110°F. VALVE TO BE INSTALLED AT EACH LAVATORY AND SHALL MEET ASSE STANDARD 1070. VALVE TO BE ALSO LABELED CSA B125 CERTIFIED. VALVE SHALL BE BRONZE BODY WITH INTEGRAL CHECKS, FILTER WASHERS AND AN ADJUSTMENT CAP WITH LOCKING FEATURE. THE VALVE SHALL BE APPROVED FOR 0.5 GPM WATERFLOW IN ACCORDANCE WITH ASSE 1016–2003.

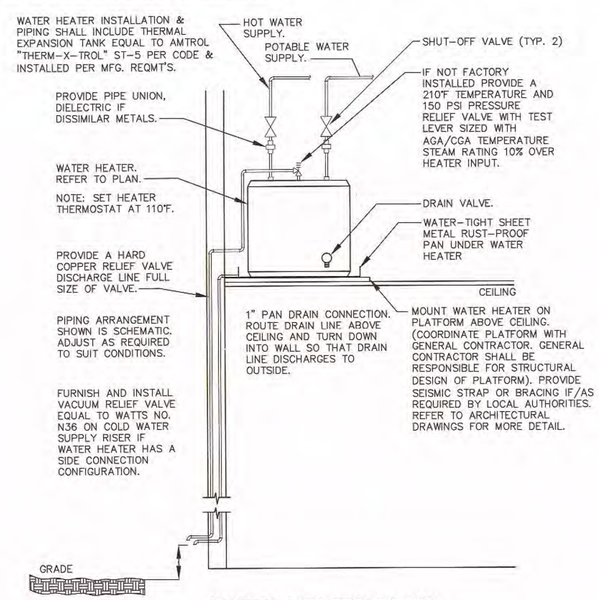

WATER HEATER DETAIL

SCALE: NONE

PLUMBING SPECIFICATIONS:

GENERAL: CONTRACTOR SHALL PROVIDE ALL LABOR, MATERIALS, TOOLS, EQUIPMENT AND MANAGEMENT NECESSARY OR REASONABLY INCIDENTAL TO COMPLETE THE WORK SHOWN ON THE DRAWINGS AND/OR DESCRIBED IN THE SPECIFICATIONS.

CODES AND ORDINANCES: ALL WORK PERFORMED UNDER THIS CONTRACT SHALL BE IN STRICT ACCORDANCE WITH REQUIREMENTS OF THE OWNER'S INSURANCE CARRIER, NFPA CODES, STATE AND LOCAL LAWS AND CODES, AND ALL LAWS, RULES AND REGULATIONS OF PUBLIC BODIES HAVING JURISDICTION.

INTERFERENCES: CONTRACTOR SHALL VISIT THE SITE AND INSPECT THE AREA WHERE THE WORK IS TO BE PERFORMED. CONTRACTOR SHALL BE RESPONSIBLE FOR ACCOMMODATING ALL INTERFERENCES WITH THE WORK, OFFSETTING, MODIFYING, AND OTHERWISE FITTING THE NEW EQUIPMENT TO THE SPACE AVAILABLE.

GUARANTEE: ALL MATERIALS AND WORKMANSHIP PROVIDED SHALL BE WARRANTED AGAINST DEFECTS FOR A PERIOD OF ONE YEAR FROM THE DATE OF FINAL ACCEPTANCE OF THE WORK.

CLEAN–UP: ALL DEBRIS, RUBBISH, SCRAPS, ETC. SHALL BE CLEANED UP AT THE END OF EACH WORK DAY. AT THE COMPLETION OF THE WORK, ALL NEW CONSTRUCTION WORK AND MATERIALS SHALL BE CLEANED UP OF MARKINGS, DIRT, ETC. AND LEFT IN A CLEAN AND SIGHTLY CONDITION, READY FOR USE BY THE OWNER.

PIPING MATERIALS:

POTABLE WATER: POTABLE WATER PIPE SHALL BE ASTM B–88 HARD DRAWN COPPER, TYPE L OR K. FITTINGS SHALL BE ANSI B–16.22, WROUGHT COPPER, SOLDER JOINT. JOINTS SHALL BE MADE USING NON–CORROSIVE FLUX AND SOLDER COMPOUND MEETING NSF REQUIREMENTS FOR USE ON POTABLE WATER PIPING. PIPE ENDS SHALL BE CUT SQUARE AND CLEANED TO A BRIGHT METAL FINISH BEFORE SOLDERING.

SANITARY SEWER WASTE AND VENT ABOVE GROUND: SANITARY SEWER PIPE AND FITTINGS SHALL BE EITHER CAST IRON, ASTM A–74, SERVICE WEIGHT, HUB AND SPIGOT PATTERN WITH ASTM C–564 RESILIENT GASKETS; OR HUBLESS CAST–IRON PIPE AND FITTINGS, ASTM A 888, CISPI–301, WITH STANDARD, SHIELDED, STAINLESS–STEEL COUPLINGS CONFORMING TO CISPI–310, WITH STAINLESS–STEEL CORRUGATED SHIELD, STAINLESS–STEEL BANDS AND TIGHTENING DEVICES, AND ASTM C–564, RUBBER SLEEVE; OR SCHEDULE 40 PVC DRAIN, WASTE AND VENT (DWV) PIPE AND FITTINGS, ASTM D–2665 WITH SOLVENT CEMENT JOINTS INSTALLED IN STRICT ACCORDANCE WITH MANUFACTURER'S RECOMMENDATIONS.

SANITARY SEWER WASTE AND VENT BELOW GROUND: SANITARY SEWER PIPE AND FITTINGS SHALL BE EITHER CAST IRON, ASTM A–74, SERVICE WEIGHT, HUB AND SPIGOT PATTERN WITH ASTM C–564 RESILIENT GASKETS; OR HUBLESS CAST–IRON PIPE AND FITTINGS, ASTM A 888, CISPI–301, WITH HEAVY DUTY JOINTS CONFORMING TO ASTM C–1540 EQUAL TO HUSKY SD–4000, WITH HEAVY DUTY TYPE 304 STAINLESS STEEL SHIELDED COUPLINGS HAVING 4 SEALING CLAMPS FOR PIPE SIZES 1–1/2" THRU 4" AND 6 SEALING CLAMPS FOR PIPE SIZES 5" THRU 10"; OR SCHEDULE 40 PVC DRAIN, WASTE AND VENT (DWV) PIPE AND FITTINGS, ASTM D–2665 WITH SOLVENT CEMENT JOINTS INSTALLED IN STRICT ACCORDANCE WITH MANUFACTURER'S RECOMMENDATIONS.

PIPE SUPPORTS: PIPING SHALL BE SUPPORTED FROM BUILDING STRUCTURE IN A NEAT, PERMANENT AND STABLE MANNER. WHERE BUILDING STRUCTURAL MEMBERS ARE NOT LOCATED TO SUIT EXACT REQUIREMENTS FOR PIPING SUPPORTS, THE CONTRACTOR SHALL FURNISH AND INSTALL SUCH ADDITIONAL STRUCTURAL STEEL MEMBERS AS MAY BE REQUIRED TO SAFEGUARD PIPING INSTALLATION AND BUILDING STRUCTURE.

PIPE PAINTING: ALL UNINSULATED STEEL PIPING SHALL BE THOROUGHLY CLEANED, PRIMED AND PAINTED. PIPE CLEANING SOLVENT SHALL BE A NON–OILY SOLVENT EQUAL TO STODDARD SOLVENT OR HI–FLASH COAL TAR NAPHTHA. PRIME COATING MATERIAL SHALL BE ALKYD ZINC CHROMATE. FINISH MATERIAL SHALL BE ALUMINUM ALKYD PAINT. SURFACE PREPARATION AND PAINT APPLICATION SHALL BE IN STRICT ACCORDANCE WITH PAINT MANUFACTURER'S RECOMMENDATIONS.

PIPE INSULATION: ALL HOT AND COLD WATER PIPING SHALL BE INSULATED. PIPING LOCATED IN INACCESSIBLE LOCATIONS SHALL BE INSULATED WITH NOMINAL 1/2" THICK ELASTOMERIC FOAM INSULATION EQUAL TO ARMSTRONG ARMAFLEX 22. ALL JOINTS SHALL BE MITERED AND SEALED WITH INSULATION MANUFACTURER'S APPROVED ADHESIVE EQUAL TO ARMSTRONG 520–620 INSULATION ADHESIVE. EXPOSED AND ACCESSIBLE PIPING SHALL BE INSULATED WITH FIBERGLASS PIPE INSULATION WITH ALL–SERVICE JACKET. HOT WATER PIPING INSULATION SHALL BE 1" THICK. COLD WATER PIPING INSULATION SHALL BE 1/2" THICK WITH VAPOR BARRIER. VAPOR BARRIER AT COLD WATER PIPING JOINTS SHALL BE MAINTAINED BY MEANS OF MASTIC AND TAPE. ALL FITTINGS, VALVES, ETC. SHALL BE INSULATED WITH THE SAME MATERIAL AND PROVIDED WITH PLASTIC FITTING COVERS. FLAME SPREAD AND SMOKE–DEVELOPED INDEXES SHALL NOT EXCEED 25/50.

PIPE TESTING:

POTABLE WATER: ALL WATER PIPING SHALL BE TESTED BEFORE COVERING. PIPING SYSTEM SHALL BE SUBJECTED TO A HYDROSTATIC TEST AT 150 PSI AND SHALL REMAIN TIGHT FOR A PERIOD OF AT LEAST TWO (2) HOURS. TESTS SHALL COMPLY TO AWWA STANDARD C–60–77, SECTION 4.1.

SANITARY SEWER: SANITARY SEWER PIPING SHALL BE TESTED BEFORE COVERING. ALL OPENINGS, EXCEPT HIGHEST VENT SHALL BE PLUGGED AND THE SYSTEM FILLED WITH WATER TO 10'–0" ABOVE HIGHEST FIXTURE CONNECTED. SYSTEM SHALL STAND WITHOUT LEAK OR LOSS OF WATER FOR A PERIOD OF NOT LESS THAN FOUR (4) HOURS.

STERILIZATION: ALL POTABLE WATER SYSTEM PIPING, FITTINGS AND FIXTURES SHALL BE STERILIZED (DISINFECTED) AND FLUSHED PRIOR TO USE IN ACCORDANCE WITH THE LATEST EDITION OF AMERICAN WATER WORKS ASSOCIATION STANDARD AWWA C–601.

SOUTH CAROLINA LEBLANC WELCH CONSULTING ENGINEERS NO.C00908 CERTIFICATE OF AUTHORIZATION

LEBLANCWELCH
CONSULTING ENGINEERS
25 WOODS LAKE ROAD GREENVILLE SC 29607
PHONE 864-271-6535 FAX 864-271-4973

NARRAMORE ASSOCIATES, INC.
Architects & Planners
AMERICAN INSTITUTE OF ARCHITECTS
P.O. Box 8468 Greenville, SC 29604
310 Mills Ave. Greenville, SC 29605
Phone: 864.242.9861
Fax: 864.232.2202

©2014, NARRAMORE ASSOCIATES, INC.
COPYRIGHT PROTECTED BY FEDERAL LAW

SEAL

SOUTH CAROLINA REGISTERED ARCHITECT NO. 14050 DAVID COLLIS BOND

2/5/14

Blanchard & Calhoun COMMERCIAL
2743 PERIMETER PKWY
BLDG 100 STE 370
AUGUSTA, GA 30909

POSEIDON - BLDG. 121 & 122

38 SHELTER COVE LANE
HWY. 278, MILE MARKER 8
HILTON HEAD ISLAND, SC 29928

REVISIONS

DOCUMENT DATA
BUILDING 121
PROJECT NUMBER
13914
ISSUE DATE
01-10-14

SHELTER COVE
HILTON HEAD, SC

P1.0

14110M1.0

PLUMBING PLANS
BUILDING 122

PACKAGED ROOFTOP ELECTRIC A/C UNIT SCHEDULE

UNIT NO.	SUPPLY AIR CFM	OUTSIDE AIR CFM	E.S.P. IN W.G.	INDOOR FAN H.P.	ELECTRICAL			SYSTEM COOLING					ELECTRIC HEATING		MANUFACTURER/MODEL NO.	NOM. TONS	WEIGHT LBS.	ACCESSORIES SEE NOTES
					V/PH/HZ	MCA	MAX FUSE	E.D.B. °F	E.W.B. °F	COND. °F	SENSIBLE MBH	TOTAL MBH	HEATING KW	STAGES				
RTU-1	1200	180	0.8	1	208/3/60	45	45	75	63.0	95	28.0	34.2	15	1	LENNOX / LCH036S4	3	770	1,2,3,4,5,6

ACCESSORIES NOTES:

1. FACTORY ROOF CURB – DOWNFLOW.
2. MOTORIZED OUTSIDE AIR DAMPER.
3. FACTORY PROGRAMABLE (24/7) THERMOSTAT.
4. DISCONNECT SWITCH
5. ~~THROUGH THE BASE ELECTRICAL~~
6. COASTAL CORROSION PROTECTION

5

NOTE:

ROOFTOP A/C UNIT SCHEDULE IS BASED ON UNITS AS MANUFCTURED BY LENNOX. ACCEPTABLE ALTERNATE MANUFACTURERS ARE YORK, CARRIER AND TRANE.

FOR ACCEPTABLE ALTERNATE MANUFACTURERS, CONTRACTOR SHALL BE RESPONSIBLE FOR COORDINATING ELECTRICAL REQUIREMENTS WITH THE ELECTRICAL CONTRACTOR.

EXHAUST FAN SCHEDULE

MARK	LOCATION	SERVICE	TYPE	MANUFACTURER	MODEL NO.	CAPACITY		RPM	WATTS	ELECTRICAL	COMMENTS
						CFM	TSP				
EF-1	RESTROOMS	EXHAUST	CEILING	GREENHECK	SP-B90	75	0.25	–	50	120/1/60	1,2,3

ACCESSORIES NOTES:

1. PROVIDE MODEL WC-6 HOODED WALL CAP.
2. PROVIDE BACKDRAFT DAMPER.
3. PROVIDE SPEED CONTROLLER.

VENTILATION REQUIRED PER 2012 IMC

AREA	SQ. FT.	NET OCCUPIABLE AREA (SQ. FT.)	OCCUPANTS	CFM PER SQ.FT.	CFM PER OCC.	REQ'D O.A. (CFM) (OCCUPANCY)	REQ'D O.A. (CFM) (AREA)	REQ'D O.A. TOTAL (CFM) (OCCUPANCY + AREA)	ACTUAL DESIGN O.A. (CFM)
BLDG. 122	960	576	10	0.12	7.5	75	69	144	180

HVAC LEGEND

- SUPPLY DIFFUSER
- RETURN OR EXHAUST DIFFUSER
- (T) THERMOSTAT
- FIRE DAMPER
- SUPPLY, RETURN, EXHAUST, OR OUTSIDE AIR DUCT
- —NG— NATURAL GAS LINE
- — C — CONDENSATE DRAIN LINE
- GAS SHUT-OFF VALVE
- SA SUPPLY AIR
- RA RETURN AIR

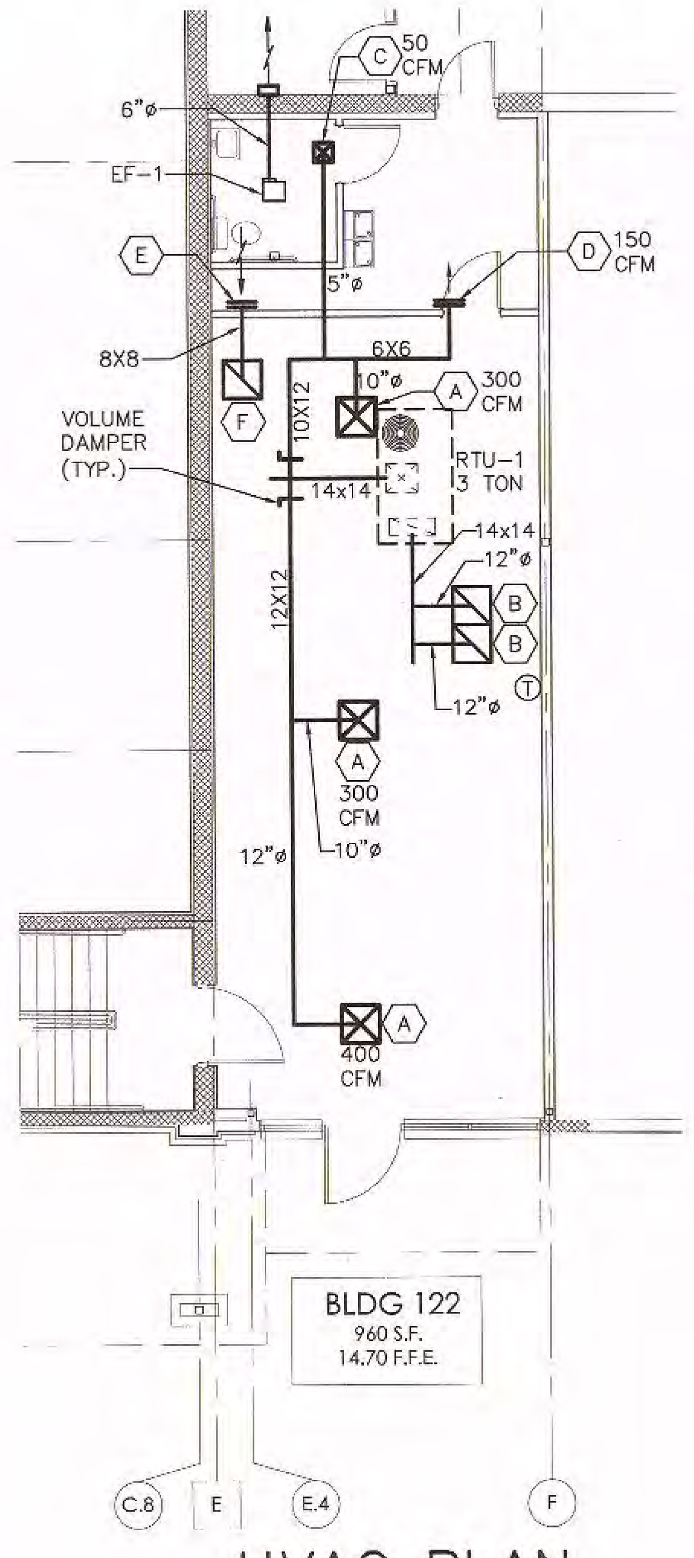

HVAC PLAN

SCALE : 1/8" = 1'-0"

GRILLE AND DIFFUSER SCHEDULE

SYMBOL	DUTY	CFM	MFR.	MODEL NO.	DIFFUSER NECK SIZE	GRILLE FACE SIZE	DISCHARGE PATTERN	SLOT LENGTH (FT.)	REMARKS
A	SUPPLY	SEE PLAN	CARNES	SFTA/SFEA	SEE PLAN	24x24	4-WAY	–	1,2,3
B	RETURN	SEE PLAN	CARNES	SPRB	SEE PLAN	24x24	–	–	2,3
C	SUPPLY	SEE PLAN	CARNES	SFTA/SFEA	SEE PLAN	12x12	4-WAY	–	1,2,3
D	SUPPLY	SEE PLAN	CARNES	RTDAH	6X6	–	–	–	1,2
E	RETURN	SEE PLAN	CARNES	RTLAH	8X8	–	–	–	2
F	RETURN	SEE PLAN	CARNES	SPJB	8X8	24x24	–	–	2

NOTES:

1. PROVIDE WITH OPPOSED BLADE DAMPER.
2. COLOR TO BE OFF WHITE.
3. DIFFUSER NECK SIZE EQUALS RUNOUT SIZE.

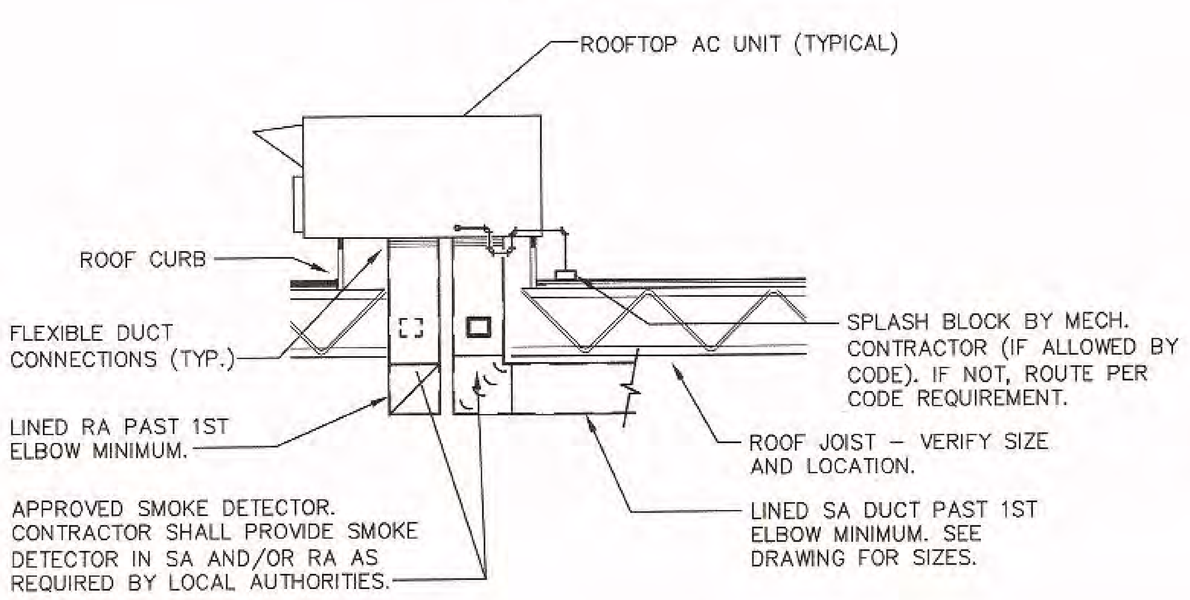

NOTE:
SMOKE DETECTOR SHALL BE PROVIDED WITH AUDIBLE AND VISUAL ALARMS PER CODE.

TYPICAL DUCTED ROOFTOP UNIT DETAIL

SCALE: NONE

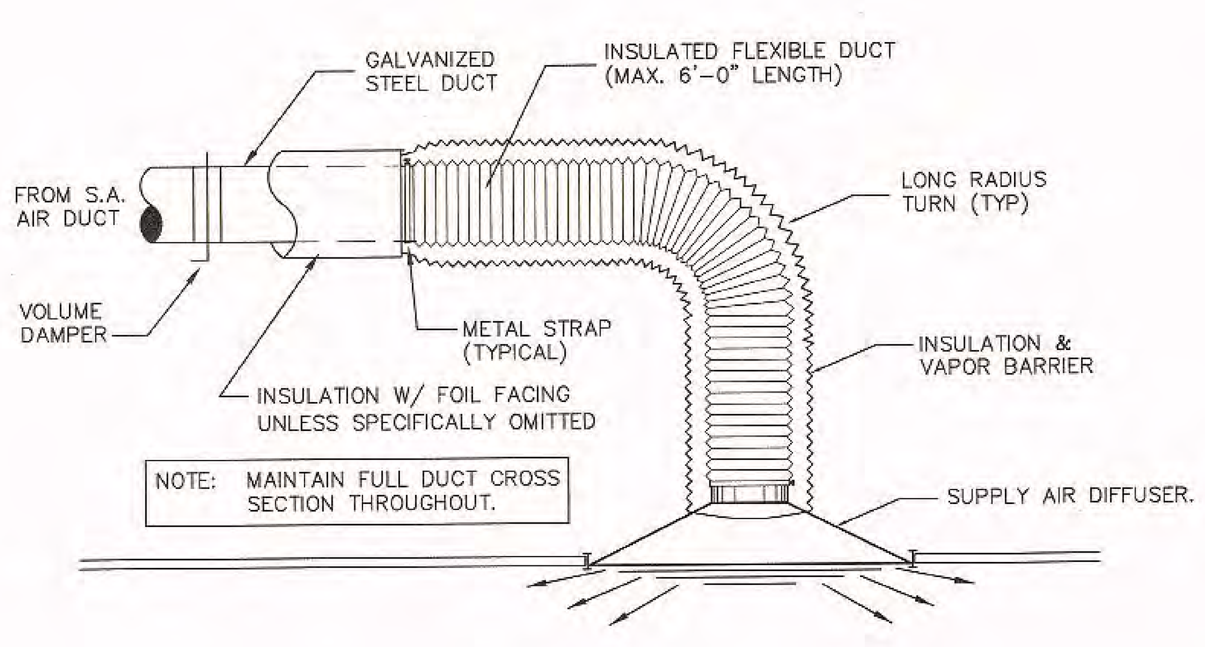

FLEXIBLE DUCT TO DIFFUSER DETAIL

SCALE: NONE

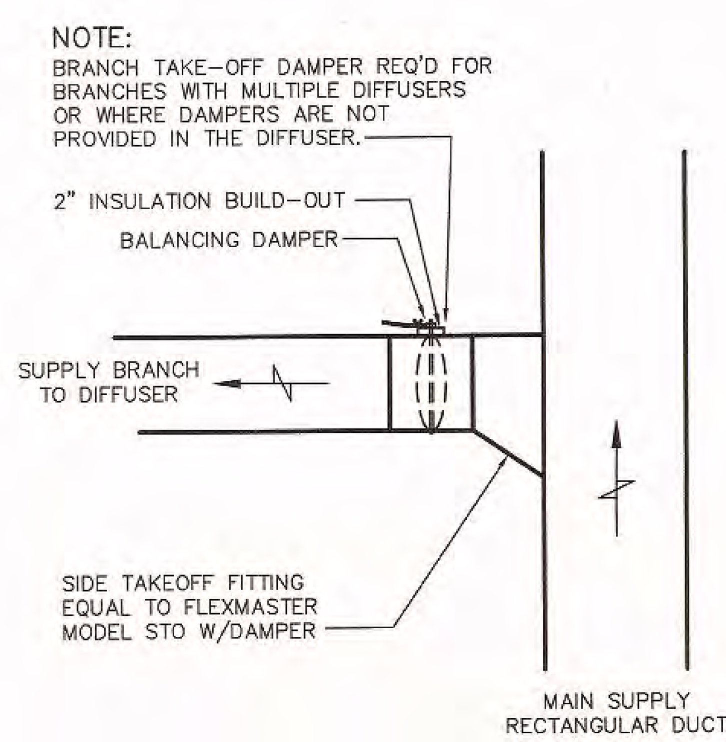

SQUARE TO ROUND DIFFUSER BRANCH TAKEOFF DETAIL

SCALE: NONE

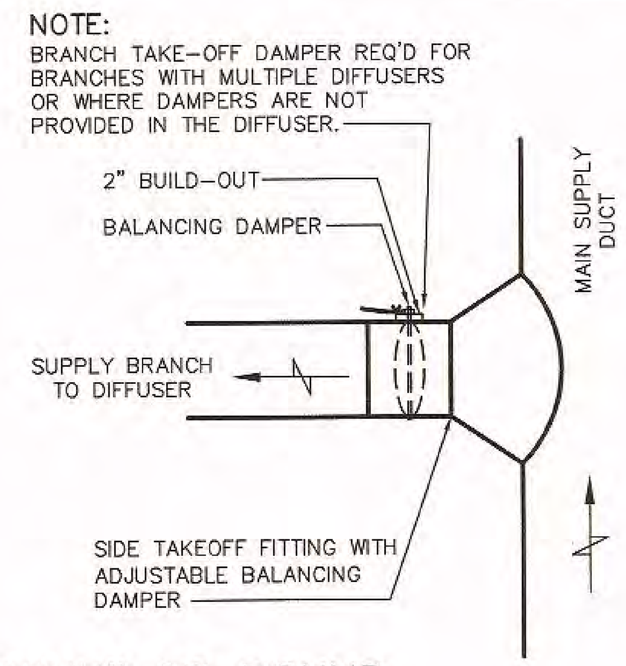

ROUND TO ROUND DIFFUSER BRANCH TAKEOFF DETAIL

SCALE: NONE

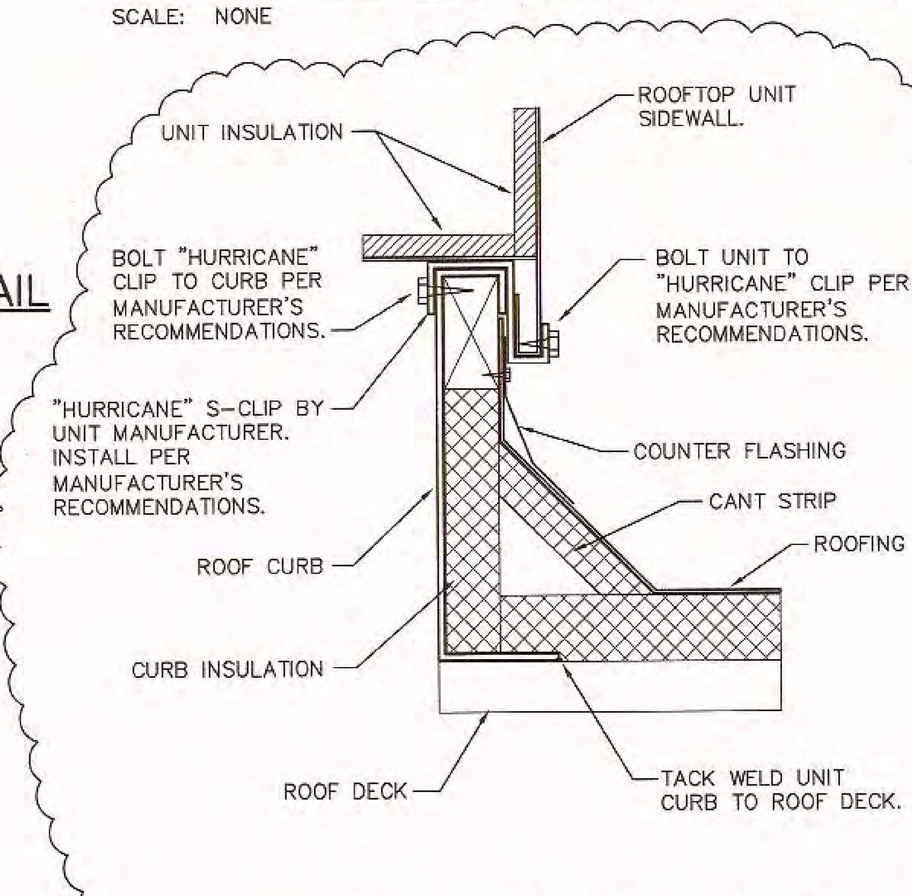

ROOFTOP UNIT CURB DETAIL

SCALE: NONE

MECHANICAL SPECIFICATIONS:

GENERAL: CONTRACTOR SHALL PROVIDE ALL LABOR, MATERIALS, TOOLS, EQUIPMENT AND MANAGEMENT NECESSARY OR REASONABLY INCIDENTAL TO COMPLETE THE WORK SHOWN ON THE DRAWINGS AND/OR DESCRIBED IN THE SPECIFICATIONS.

CODES AND ORDINANCES: ALL WORK PERFORMED UNDER THIS CONTRACT SHALL BE IN STRICT ACCORDANCE WITH REQUIREMENTS OF THE STANDARD MECHANICAL CODE OF IMC, NFPA, STATE AND LOCAL LAWS AND CODES, AND ALL LAWS, RULES AND REGULATIONS OF PUBLIC BODIES HAVING JURISDICTION.

INTERFERENCES: CONTRACTOR SHALL VISIT THE SITE AND INSPECT THE AREA WHERE THE WORK IS TO BE PERFORMED. CONTRACTOR SHALL BE RESPONSIBLE FOR ACCOMMODATING ALL INTERFERENCES WITH THE WORK, OFFSETTING, MODIFYING, AND OTHERWISE FITTING THE EQUIPMENT TO THE SPACE AVAILABLE, AND COORDINATING WITH OTHER DRAWINGS FOR CONSTRUCTION DETAILS, DIMENSIONS, INTERFERENCES, ETC.

GUARANTEE: ALL MATERIALS AND WORKMANSHIP PROVIDED SHALL BE WARRANTED AGAINST DEFECTS FOR A PERIOD OF ONE YEAR FROM THE DATE OF FINAL ACCEPTANCE OF THE WORK.

CLEAN-UP: ALL DEBRIS, RUBBISH, SCRAPS, ETC. SHALL BE CLEANED UP AT THE END OF EACH WORK DAY. AT THE COMPLETION OF THE WORK, ALL NEW CONSTRUCTION WORK AND MATERIALS SHALL BE CLEANED UP OF MARKINGS, DIRT, ETC. AND LEFT IN A CLEAN AND SIGHTLY CONDITION, READY FOR USE BY THE OWNER.

PIPE PAINTING: ALL UNINSULATED UNCONCEALED PIPING INDOORS SHALL BE CLEANED, PRIMED AND PAINTED. PIPE CLEANING SOLVENT SHALL BE A NON-OILY SOLVENT EQUAL TO HI-FLASH COAL TAR NAPHTHA. PRIME COATING MATERIAL SHALL BE ALKYD ZINC CHROMATE. FINISH MATERIAL SHALL BE ALKYD PAINT, COLOR AS SELECTED BY ARCHITECT. PREPARATION AND APPLICATION SHALL BE PER MANUFACTURERS' SPECIFICATIONS.

ROOF OPENINGS, WHERE REQUIRED, SHALL BE DEFINED AND LOCATED BY THE HVAC SUBCONTRACTOR AND CONSTRUCTED BY THE GENERAL CONTRACTOR. HVAC CONTRACTOR SHALL FURNISH AND SET ROOF CURBS.

DUCTWORK: DUCTWORK SHALL BE CONSTRUCTED OF LOCK-FORMING GALVANIZED STEEL SHEET. DUCTWORK SHALL BE CONSTRUCTED AND REINFORCED IN ACCORDANCE WITH THE MOST RECENT EDITION OF THE "HVAC DUCT CONSTRUCTION STANDARD – METAL AND FLEXIBLE" AS PUBLISHED BY THE SHEET METAL AND AIR CONDITIONING CONTRACTORS NATIONAL ASSOCIATION, INC. (SMACNA). DUCTWORK SHALL BE CONSTRUCTED AND REINFORCED ACCORDING TO THE TABLE FOR 1" W.G. DUCT DESIGN PRESSURE. DUCT SHALL BE SUPPORTED BY STRAP HANGERS PROPERLY SECURED TO THE BUILDING STRUCTURE. ALL ELBOWS SHALL BE PROVIDED WITH APPROVED TURNING VANES.

PROVIDE MANUAL BALANCING DAMPERS FOR ALL DUCT RUN-OUTS WITH MORE THAN ONE DIFFUSER IMMEDIATELY AFTER DUCT TAKE-OFF.

MITER ELBOWS SHALL HAVE DOUBLE THICKNESS METAL TURNING VANES. FURNISH AND INSTALL SPLITTER DAMPERS, AND VOLUME DAMPERS AS REQUIRED FOR CONTROL OF AIR DISTRIBUTION AND FOR BALANCING.

DUCT INSULATION: RECTANGULAR SUPPLY AND RETURN AIR DUCTWORK SHALL BE INSULATED WITH SCHULLER "PERMACOTE LINACOUSTIC" FLEXIBLE COATED FIBERGLASS LINER PAST FIRST ELBOW MINIMUM. LINER SHALL BE 1" THICK, 2-LB. DENSITY, WITH APPROVED AIR-SIDE SURFACE COATING. INSTALL PER MANUFACTURER'S RECOMMENDATIONS. REMAINING SUPPLY AND RETURN AIR DUCTWORK SHALL BE INSULATED WITH 2" FOIL INSULATION MEETING UL-181 AND NFPA 90A SPECIFICATIONS. ALL INSULATION SHALL BE VAPOR SEALED PER MANUFACTURER'S RECOMMENDATIONS.

FLEXIBLE DUCTWORK: MAXIMUM 6 FT. FLEX DUCT SHALL BE ALLOWED TO CONNECT TO DIFFUSERS WHERE CONCEALED ABOVE CEILINGS. FLEXIBLE ROUND DUCT SHALL BE EQUAL TO FLEXMASTER TYPE 5, THERMAL CONDUCTANCE .23, WITH TRILAMINATE LINER BONDED TO GALVANIZED HELIX AND FIRE RETARDANT POLYETHYLENE OUTER LINER.

DUCT ROUTING: WHERE CLEARANCE ABOVE CEILING OR INTERFERENCES PREVENT DIFFUSER CONNECTIONS EXACTLY AS SHOWN ON DRAWINGS, RELOCATE DUCTS OR DIFFUSERS NOT MORE THAN 2 FEET TO FACILITATE INSTALLATION. SHOW CHANGES ON SHOP DRAWING SUBMITTALS FOR APPROVAL.

HVAC SYSTEM CONTROL WIRING SHALL BE PROVIDED BY THE HVAC CONTRACTOR AND SHALL MEET IMC AND NEC REQUIREMENTS. HVAC CONTROL SYSTEMS SHALL PROVIDE A COMPLETE AND OPERABLE SYSTEM OF TEMPERATURE CONTROL.

CONTRACTOR SHALL ARRANGE ROOFTOP A/C UNITS TO PROVIDE EFFICIENT CONNECTION OF S.A. AND R.A. DUCTS. ANY CHANGE IN SIZE, WEIGHT, LOCATION, OR ARRANGEMENT OF HVAC EQUIPMENT SHALL BE EVALUATED BY THE HVAC CONTRACTOR FOR BUILDING LOADING, STRUCTURAL INTEGRITY OF THE SUPPORT SYSTEM, DUCT CONNECTIONS, AND GAS AND ELECTRICAL SERVICES, AND HE SHALL SUBMIT REVISED DRAWINGS AND DETAILS TO ACCOMMODATE THE CHANGES.

TESTING AND BALANCING: TESTING AND BALANCING SHALL BE PERFORMED BY AN EXPERIENCED TESTING AND BALANCING FIRM. ALL TESTING AND BALANCING SHALL BE IN ACCORDANCE WITH SMACNA "HVAC TESTING, ADJUSTING AND BALANCING MANUAL; 1993 EDITION." TESTS SHALL BE MADE TO DETERMINE THAT THE COMPLETE AIR CONDITIONING SYSTEM IS OF SPECIFIED CAPACITY AND THAT ALL CONTROLS WILL OPERATE IN SEQUENCE. TEST RESULTS SHALL BE SIGNED AND CERTIFIED BY THE TESTING FIRM AND SUBMITTED TO THE OWNER. THE TESTING AND BALANCING CONTRACTOR (ALONG WITH THE CONTROLS CONTRACTOR) SHALL COME BACK DURING THE SUMMER AND MAKE SURE EVERYTHING IS FINCTIONING PROPERLY.

SOUTH CAROLINA LEBLANC WELCH CONSULTING ENGINEERS NO.C00908 CERTIFICATE OF AUTHORIZATION

LEBLANCWELCH
CONSULTING ENGINEERS
25 WOODS LAKE ROAD GREENVILLE SC 29607
PHONE 864-271-6535 FAX 864-271-4973

NARRAMORE ASSOCIATES, INC.
Architects & Planners
AMERICAN INSTITUTE OF ARCHITECTS
P.O. Box 8438 Greenville, SC 29604
310 Mills Ave. Greenville, SC 29605
Phone: 8642429881
Fax: 8642325202

©2014, NARRAMORE ASSOCIATES, INC. COPYRIGHT PROTECTED BY FEDERAL LAW

SEAL
SOUTH CAROLINA ... NO. 14850 ... DAVID COLLIS BONDS
3/27/14

Blanchard & Calhoun COMMERCIAL
2743 PERIMETER PKWY
BLDG 100 STE 370
AUGUSTA, GA 30909

POSEIDON - BLDG. 121 & 122
38 SHELTER COVE LANE
HWY. 278, MILE MARKER 8
HILTON HEAD ISLAND, SC 29928

REVISIONS		
5	REVISIONS	03/27/14

DOCUMENT DATA
BUILDING 121
PROJECT NUMBER
13914
ISSUE DATE
01-10-14

SHELTER COVE
HILTON HEAD, SC

M1.0

14110M1.0

HVAC PLAN/DETAILS
BUILDING 122

LIGHTING FIXTURES

A 1 — RECESSED CEILING MOUNTED FLUORESCENT LIGHTING FIXTURE. THE LETTER DENOTES TYPE OF FIXTURE AS SHOWN IN THE FIXTURE SCHEDULE; AND THE NUMBER DENOTES BRANCH CIRCUIT NUMBER.

A NL — SIMILAR TO ABOVE EXCEPT CIRCUITED AS A NIGHT LIGHT (NL).

WALL MOUNTED HPS LIGHTING FIXTURE. NOTATION SAME AS ABOVE.

RECESSED CEILING MOUNTED EMERGENCY LIGHING UNIT, NOTATION SAME AS ABOVE

WALL MOUNTED COMBINATION EMERGENCY AND EXIT FIXTURE. NOTATION SAME AS ABOVE.

EXHAUST FAN TOILETS - FURNISHED AND INSTALLED UNDER OTHER DIVISIONS OF THE SPECIFICATIONS, BUT POWER WIRED UNDER DIVISION 16.

WIRING DEVICES

$ — SINGLE POLE LIGHTING SWITCH, 20A., 120-277V., FLUSH MOUNTED, UNLESS OTHERWISE INDICATED, 46" A.F.F. WHERE INDICATED, SUBSCRIPT DENOTES CORRESPONDING LIGHT FIXTURE(S) CONTROLLED.

DUPLEX CONVENIENCE RECEPTACLE, 15A., 125V., 3 WIRE, PARALLEL BLADE, GROUNDING TYPE, NEMA 5-15R, FLUSH MOUNTED, UNLESS OTHERWISE INDICATED, 18" A.F.F. PROVIDE NEMA 5-20R IF SINGLE RECEPTACLE ON 20A. CIRCUIT.

WP — RECEPTACLE, SIMILAR TO ABOVE EXCEPT WITH WEATHERPROOF COVER. GFI INDICATES GROUND FAULT INTERRUPTER TYPE.

MISCELLANEOUS CONNECTIONS

WH — WATER HEATER, FURNISHED AND INSTALLED UNDER OTHER DIVISIONS OF THE SPECIFICATIONS, BUT POWER WIRED UNDER DIVISION 16.

UH — SURFACE MOUNTED WALL UNIT HEATER EQUIPPED WITH THERMOSTATIC FAN FASCO #1235 : 1.5 KW / 120V / 1 OUTLET FOR HVAC THERMOSTAT FURNISHED AND INSTALLED UNDER OTHER DIVISIONS OF SPECIFICATIONS.

T — INSTALL EMPTY 3/4" C. CONCEALED TO CORRESPONDING ROOFTOP A/C UNIT.

MISCELLANEOUS DEVICES

100/90/3P/3R 90AF — ISOLATING DISCONNECT SWITCH - NUMBERS INDICATE : AMPERE RATING/ FUSE SIZE (NF INDICATES NON-FUSED)/ NUMBER OF POLES/NEMA ENCLOSURE RATING. FOR FUSIBLE TYPE, FUSES SHALL BE DUAL ELEMENT, TIME DELAY, SIMILAR TO BUSS FUSETRON. ADDITIONAL DATA AS INDICATED:

J — MISCELLANEOUS OUTLET BOX (USUALLY 4" SQUARE OR OCTAGON X 1-1/2" DEEP MINIMUM) WITH COVER. GENERALLY MOUNT CONCEALED ABOVE HUNG CEILING.

GROUNDING SYSTEM

— G — GROUNDING CONDUCTOR, BARE STRANDED COPPER, DIRECTLY BURIED 24" BELOW FINISHED GRADE. (SIZE PER NEC).

TELEPHONE SYSTEM

TELEPHONE OUTLET, SINGLE GANG FLUSH OUTLET MOUNTED 18" A.F.F. UNLESS NOTED OTHERWISE, HOMERUN 3/4" EMPTY CONDUIT CONCEALED TO TELEPHONE EQUIPMENT BOARD. COORDINATE AND ADJUST THE EXACT OUTLET LOCATION IN THE FIELD WITH THE OWNER'S TELEPHONE INSTALLER.

ABBREVIATIONS

AFF	ABOVE FINISHED FLOOR	MCB	MAIN CIRCUIT BREAKER
BKR	BREAKER	NTS	NOT TO SCALE
CU	COPPER	PH	PHASE
CKT	CIRCUIT	PNL	PANEL
DWG	DRAWING	RECPT.	RECEPTACLE
FU	FUSE	REQD	REQUIRED
FWE	FURNISHED WITH EQUIPMENT	SW	SWITCH
GFI	GROUND FAULT INTERRUPTER	UNO	UNLESS NOTED OTHERWISE
LTG	DEVICE LIGHTING	W/	WITH
MLO	MAIN LUGS ONLY	WH	WATER HEATER
		WP	WEATHER PROOF
		U/G	UNDER GROUND

LIGHTING FIXTURE SCHEDULE

☐ TYPE A

DESCRIPTION	RECESSED 2' x 4' FLUORESCENT GRID TROFFER WITH PRISMATIC LENS
MANUFACTURER LAMPS VOLT-AMPS, VOLTS	METALUX #2GR8-432A-277-EB82 FOUR F032T8/4100K 120 V.A., 277 V.

☐ TYPE B

DESCRIPTION	RECESSED 2' x 2' FLUORESCENT GRID TROFFER WITH PRISMATIC LENS
MANUFACTURER LAMPS VOLT-AMPS, VOLTS	METALUX # 2EP3GX2024-317-S33I-277V-EB81 FOUR F17T8/4100K 120V.A., 277 V.

☐ TYPE C

DESCRIPTION	LED WALL PACK DARK BRONZE WITH CUTOFF
MANUFACTURER LAMPS VOLT-AMPS, VOLTS	LITHONIA WST-LED-10A700/40K-SR3-MVOLT-ELCW-DDBXD 70 V.A., 277 V.

☐ TYPE D

DESCRIPTION	COMBINATION EMERGENCY AND EXIT FIXTURE
MANUFACTURER LAMPS VOLT-AMPS, VOLTS	SURELITES #CCX-70-RWH-DH, TWO 9WPAR36, 6V 50 V.A., 277 V. * INDICATES #CCXH WITH 6T-6-W REMOTE HEAD

☐ TYPE E

DESCRIPTION	WALL MOUNTED EMERGENCY LIGHTING UNIT
MANUFACTURER LAMPS VOLT-AMPS, VOLTS	SURELITES #XR-9 TWO 25W 6V DC 50 V.A., 277 V.

☐ TYPE F

DESCRIPTION	RECESSED CEILING MOUNTED EMERGENCY LIGHTING UNIT
MANUFACTURER LAMPS VOLT-AMPS, VOLTS	SURELITES #GC-1502-2 TWO 25W 6V DC 50V.A., 277V.

☐ TYPE G

DESCRIPTION	4' FLUORESCENT STRIP FIXTURE
MANUFACTURER LAMPS VOLT-AMPS, VOLTS	METALUX #SS-232-277-EB81 TWO F032T8/4100K 65V.A., 277 V.

ELECTRICAL LEGEND

PANELBOARDS

3 PHASE, 4W, LIGHTING & APPLIANCE PANEL BOARD. SEE SCHEDULE FOR COMPLETE DATA.

RACEWAYS

BRANCH CIRCUIT WIRING, INSTALLED OVERHEAD OR IN WALL (CONCEALED WHERE POSSIBLE). SHORT HASH MARKS INDICATE NO. OF PHASE CONDUCTORS. LONGER HASH MARKS DENOTE NEUTRAL CONDUCTORS. UNLESS OTHERWISE NOTED OR SPECIFIED USE #12 AWG WIRE. DETERMINE CONDUIT SIZE FROM HASH MARKS UTILIZING CONDUIT FILL TABLES IN N.E.C. 1/2" IS MINIMUM CONDUIT SIZE. NO HASH MARKS INDICATE 2 #12, 1 #12 GROUNDING CONDUCTOR IN 1/2" CONDUIT. (NOTE THAT ALL CONDUITS MUST CONTAIN AN EQUIPMENT GROUNDING CONDUCTOR, AND THAT THIS CONDUCTOR IS NOT INDICATED WITH HASH MARKS). BX-CABLE IS PERMITTED AS ALLOWED BY NEC.

SIMILAR TO ABOVE, EXCEPT RUN IN OR UNDER FLOOR SLAB OR UNDERGROUND. CONDUIT CONDUCTOR SIZES SHALL BE AS INDICATED. MINIMUM SIZE CONDUIT SHALL BE 3/4".

1,3,5 — HOMERUN TO PANELBOARD. NUMBERS INDICATE BRANCH CIRCUITS.

—6VDC— SIMILAR TO ABOVE, EXCEPT CONTAINING 6VDC EMERGENCY LIGHTING CONDUCTORS. MINIMUM CONDUCTOR SIZE SHALL BE #10 AWG.

FIRE RISER NOTE:
DOUBLE CHECK VALVES AND ANNUCIATOR PANEL MUST BE LOCATED WITHIN THE RISER ROOM. SPRINKLER DESIGN TO USE OVERSIZE PIPE AND LARGE ORIFICE HEADS AS NECESSARY TO FUNCTION PROPERLY WITH EXISTING FLOWS AND PRESSURES. UNIT A-2 SPRINKLER HEAD LOCATIONS MUST BE COORDINATED THROUGH NARRAMORE ASSOCIATES TO ANTICIPATE TENANT'S FUTURE UPFIT PLANS.

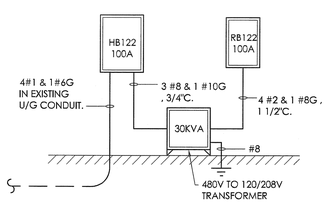

480/277V 3Ø 4W, ELECTRICAL SERVICE FROM METER TROUGH MBI. REFER TO DRAWINGS B.E101 & B.E601

3 ELECTRICAL RISER DIAGRAM
NOT TO SCALE

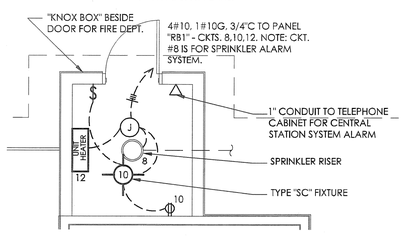

2 SPRINKLER RISER ROOM ELECTRICAL PLAN
SCALE: 1/4"=1'-0"

PLAN NORTH

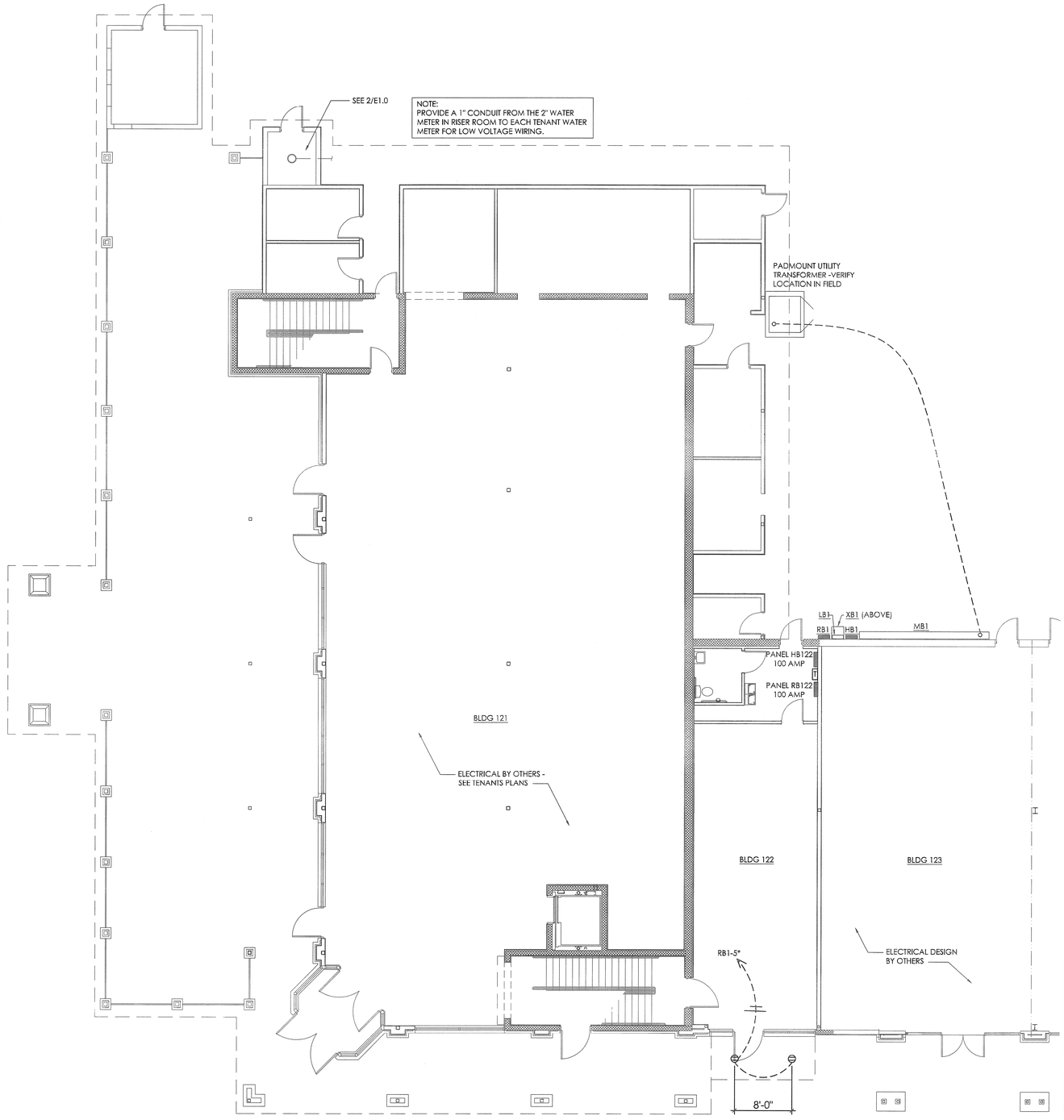

1 OVERALL FLOOR PLAN
SCALE: 1/8"=1'-0"

PLAN NORTH

NARRAMORE ASSOCIATES, INC.
Architects & Planners
AMERICAN INSTITUTE OF ARCHITECTS
P.O. Box 8438 Greenville, SC 29604
310 Mills Ave. Greenville, SC 29605
Phone: 864.242.9881
Fax: 864.232.5202
plans@narramore-architects.com

©2014, NARRAMORE ASSOCIATES, INC.
COPYRIGHT PROTECTED BY FEDERAL LAW

SEAL
SOUTH CAROLINA PROFESSIONAL ENGINEER
NO. 7953
REGISTERED
ROGER S. PASSMORE
2-5-14

Blanchard & Calhoun COMMERCIAL
2743 PERIMETER PKWY
BLDG 100 STE 370
AUGUSTA, GA 30909

POSEIDON - BLDG. 121 & 122
38 SHELTER COVE LANE
HWY. 278, MILE MARKER 8
HILTON HEAD ISLAND, SC 29928

REVISIONS
1 02-06-14

DOCUMENT DATA
BUILDING 121
PROJECT NUMBER
13914
ISSUE DATE
01-10-14

SHELTER COVE
HILTON HEAD, SC

E1.0

ELECTRICAL PLAN

DESIGN TEAM/DRB COMMENT SHEET

The comments below are staff recommendations to the Design Review Board (DRB) and do NOT constitute DRB approval or denial.

PROJECT NAME: Shelter Cove Towne Centre – Building 121 – ALTERATION/ADDITION

DRB#: 140004

DATE: May 13, 2014

RECOMMENDATION: Approval ☒ Approval with Conditions ☐ Denial ☐

The Applicant proposes modify the approved elevations for Building 121 and has revised plans based on previous comments from the DRB. Cut sheets for proposed lighting need to be submitted for the files.

Town of Hilton Head Island

Community Development Department
One Town Center Court
Hilton Head Island, SC 29928
Phone: 843-341-4757 Fax: 843-842-8908
www.hiltonheadislandsc.gov

FOR OFFICIAL USE ONLY
Date Received: 4.2.14
Accepted by: SARAH W.
App. #: DR 140020
Meeting Date:

Applicant/Agent Name: Roni Allbritton Company: Shelter Cove Towne Centre
Mailing Address: 40 Shelter Cove Ln City: HH State: SC Zip: 29928
Telephone: 686-3090 Fax: 686-5581 E-mail: allbritton@sheltercovetownecentre.com
Project Name: Shelter Cove Towne Centre Project Address: Bldg 104
Parcel Number [PIN]: R 520 012 00B0026 0000
Zoning District: _____ Overlay District(s): _____

DESIGN REVIEW BOARD (DR) SUBMITTAL REQUIREMENTS

Digital Submissions may be accepted via e-mail by calling 843-341-4757.

Project Category:

____ New Development – Conceptual
____ New Development – Final, indicate Project Number
X Alteration/Addition
____ Minor External Change

Submittal Requirements for ***All*** projects:

✓ Private Architectural Review Board (ARB) Notice of Action (if applicable): When a project is within the jurisdiction of an ARB, the applicant shall submit such ARB's written notice of action per LMO Section 16-3-1004. Submitting an application to the ARB to meet this requirement is the responsibility of the applicant.

✓ Filing Fee, New Development $175, Alterations/Additions $100, Minor External $50 cash or check made payable to the Town of Hilton Head Island.

Additional Submittal Requirements:

New Development – Conceptual Approval

____ A survey (1"=30' minimum scale) of property lines, existing topography and the location of trees meeting the tree protection regulations of Sec. 16-3-405, and if applicable, location of bordering streets, marshes and beaches.

____ A site analysis study to include specimen trees, access, significant topography, wetlands, buffers, setbacks, views, orientation and other site features that may influence design.

____ A draft written narrative describing the design intent of the project, its goals and objectives and how it reflects the site analysis results.

____ Context photographs of neighboring uses and architectural styles.

____ Conceptual site plan (to scale) showing proposed location of new structures, parking areas and landscaping.

____ Conceptual sketches of primary exterior elevations showing architectural character of the proposed development, materials, colors, shadow lines and landscaping.

Additional Submittal Requirements:

New Development – Final Approval

_____ A final written narrative describing how the project conforms with the conceptual approval and design review guidelines of Sec. 16-4-503.

_____ Final site development plan meeting the requirements of Sec. 16-3-303.F.

_____ Final site lighting and landscaping plans meeting the requirements of Sec. 16-3-304 and Sec. 16-3-305.

_____ Final floor plans and elevation drawings (1/8"=1'-0" minimum scale) showing exterior building materials and colors with architectural sections and details to adequately describe the project.

_____ A color board (11"x17" maximum) containing actual color samples of all exterior finishes, keyed to the elevations, and indicating the manufacturer's name and color designation.

_____ Any additional information requested by the Design Review Board at the time of concept approval, such as scale model or color renderings, that the Board finds necessary in order to act on a final application.

Additional Submittal Requirements:

Alterations/Additions *and* Minor External Changes

✓ A written narrative describing how project conforms to design guidelines of Section 16-4-503.

✓ Photographs and/or drawings of existing development.

✓ Drawings of the proposed development – 11"x 17".

✓ Material/color samples of existing and proposed changes - 8 ½"X 14" *Maximum*; Stating manufacturer and material name

Note: All application items must be received by the deadline date in order to be reviewed by the DRB per LMO Section 16-3-106.

A representative for each agenda item is strongly encouraged to attend the meeting.

Are there recorded private covenants and/or restrictions that are contrary to, conflict with, or prohibit the proposed request? If yes, a copy of the private covenants and/or restrictions must be submitted with this application. ☐**YES** ☒**NO**

To the best of my knowledge, the information on this application and all additional documentation is true, factual, and complete. I hereby agree to abide by all conditions of any approvals granted by the Town of Hilton Head Island. I understand that such conditions shall apply to the subject property only and are a right or obligation transferable by sale.

I further understand that in the event of a State of Emergency due to a Disaster, the review and approval times set forth in the Land Management Ordinance may be suspended.

SIGNATURE _____ DATE 4-1-14

Shelter Cove Town Center- Building 104: Narrative of Design Conformance

Building 104 has been designed with a flat roof/parapet system in order to provide a sense of 'variety' within the Shelter Cove Towne Center. The exterior wall finishes, trim and canopies replicate similar design elements and colors as are used on other buildings within the overall development.

Wall finishes of 'board & batten' and 'machine-cut shingles' are reminiscent of structures as can be seen throughout the South Carolina low-country. The walls are capped with a substantial cornice band reflecting a classic design motif which is also a common design element of the area.

Although used in a contemporary design context, the elements and colors provide a sense of continuity between the various building designs of the project. Shadow lines created by varying materials, building setbacks, canopy overhangs and storefront variations provide visual stimulus for the overall building.

The location of Building 104 is directly across from the Kroger which has large expanses of a 'flat-roof' type façade as well as parts of adjacent buildings across the intersection on which Building 104 is located. This building provides an ideal 'transition' from the traditional 'sloped-roofs' of the Jos. A Banks Building and the AT&T Building located behind and on either side of the drive that approaches it.

If one stands on the proposed site of Building 104 and looks around, it becomes very obvious that this building should be an exception to a 'hard fast rule' that "all buildings shall have a sloped roof". Such a restriction stifles a variety of design that, in the overall context of the project, provides the 'visual excitement' that makes Shelter Cove a 'destination' place.

Without reliance on repetition or "sameness", we feel the design of Building 104 reflects the 'island vernacular' within a contemporary concept while preserving a traditional ambiance.

David L Narramore AIA

NARRAMORE ASSOCIATES, INC.
Architects & Planners
AMERICAN INSTITUTE OF ARCHITECTS

March 28, 2014

Shelter Cove Towne Center – Building 104 Narrative of Design Conformance

Building 104 has been designed with a flat roof/parapet system in order to provide a sense of 'variety' within the Shelter Cove Towne Center. The exterior wall finishes, trim and canopies replicate similar design elements and colors as are used on other buildings within the overall development.

Wall finishes of 'board & batten' and 'machine-cut shingles' are reminiscent of structures as can be seen throughout the South Carolina low-country. The walls are capped with a substantial cornice band reflecting a classic design motif which is also a common design element of the area.

Although used in a different design context, the elements and colors provide a sense of continuity between the various building designs of the project. Shadow lines created by varying materials, building setbacks, canopy overhangs and storefront variations provide visual stimulus for the overall building.

Without reliance on repetition or "sameness", we feel the design of Building 104 reflects the 'island vernacular' within a contemporary concept while preserving a traditional ambiance.

Sincerely,

David L. Narramore

P.O. Box 8438, Greenville, SC 29604 • 310 Mills Avenue, Suite 203, Greenville, SC 29605
Phone: 864-242-9881 / Fax: 864-232-5202 • e-mail: plans@narramore-architects.com

SHELTER COVE TOWNE CENTRE - BUILDING 104

STOREFRONT & METAL AWNINGS:
CLEAR ANODIZED ALUMINUM

CORNICE & METAL COPING:
SW #7042 "SHOJI WHITE"

BOARD & BATTEN & TRIM:
SW #6071 "POPULAR GRAY"

FIBER CEMENT MACHINE CUT SHAKE & TRIM:
SW #7534 "OUTERBANKS"

SHELTER COVE HARBOUR COMPANY
PO Box 6004
Hilton Head Island, SC 29938

April 15, 2014

Roni Allbritton
Shelter Cove Towne Centre
40 Shelter Cove Lane, Suite 180
Hilton Head Island, SC 29928

RE: Building 104

Dear Roni,

The Shelter Cove Harbour Company's ARB is in receipt of your application for the above reference project at your property.

The ARB met and approved the project as submitted per the plans by Narramore Associates, Inc. and Blanchard and Calhoun Commercial as of the last revision dated March 28, 2014.

Please notify the SCHC office at (843) 310-0431 or by email at jbetts@sheltercovehc.org should you have any questions.

With Kindest Regards,

John P. Betts
Manager

Cc: Mr. Scott Foster, Chairman
SCHCARB Committee

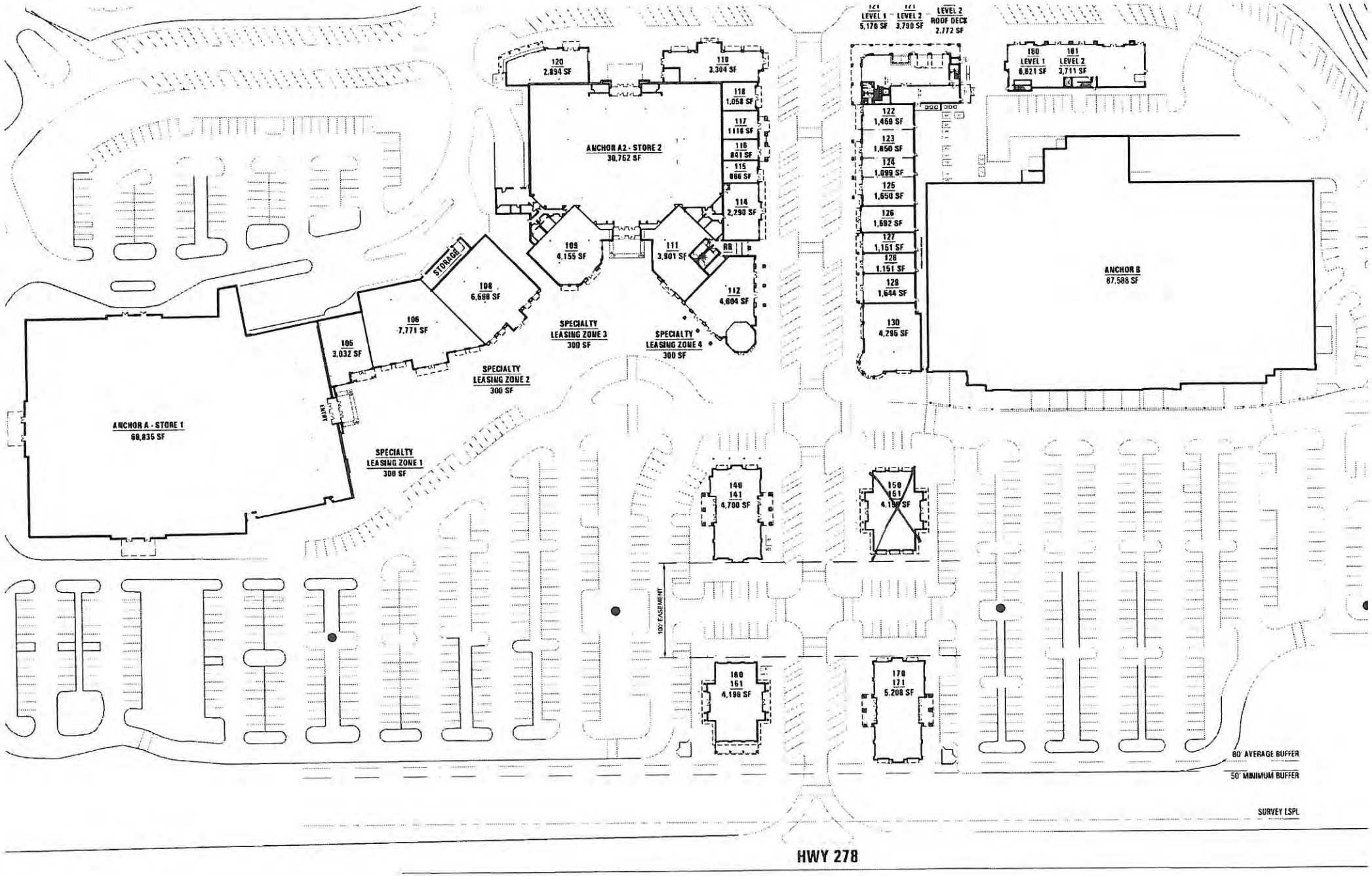

AREA TABULATION	
NAME	AREA
Specialty Leasing Zone	
SPECIALTY LEASING ZONE 1	300 SF
SPECIALTY LEASING ZONE 2	300 SF

AREA TABULATION		
NAME	AREA	
105	3,032 SF	CDS
106	7,771 SF	CDS
108	6,598 SF	CDS
109	4,155 SF	CDS
111	3,901 SF	CDS

AREA TABULATION		
NAME	AREA	
122	1,459 SF	RCDS
123	1,650 SF	RCDS
124	1,099 SF	RCDS
125	1,650 SF	RCDS
126	1,592 SF	WB

LEASE PLAN

0' 50' 100' 150

NORTH

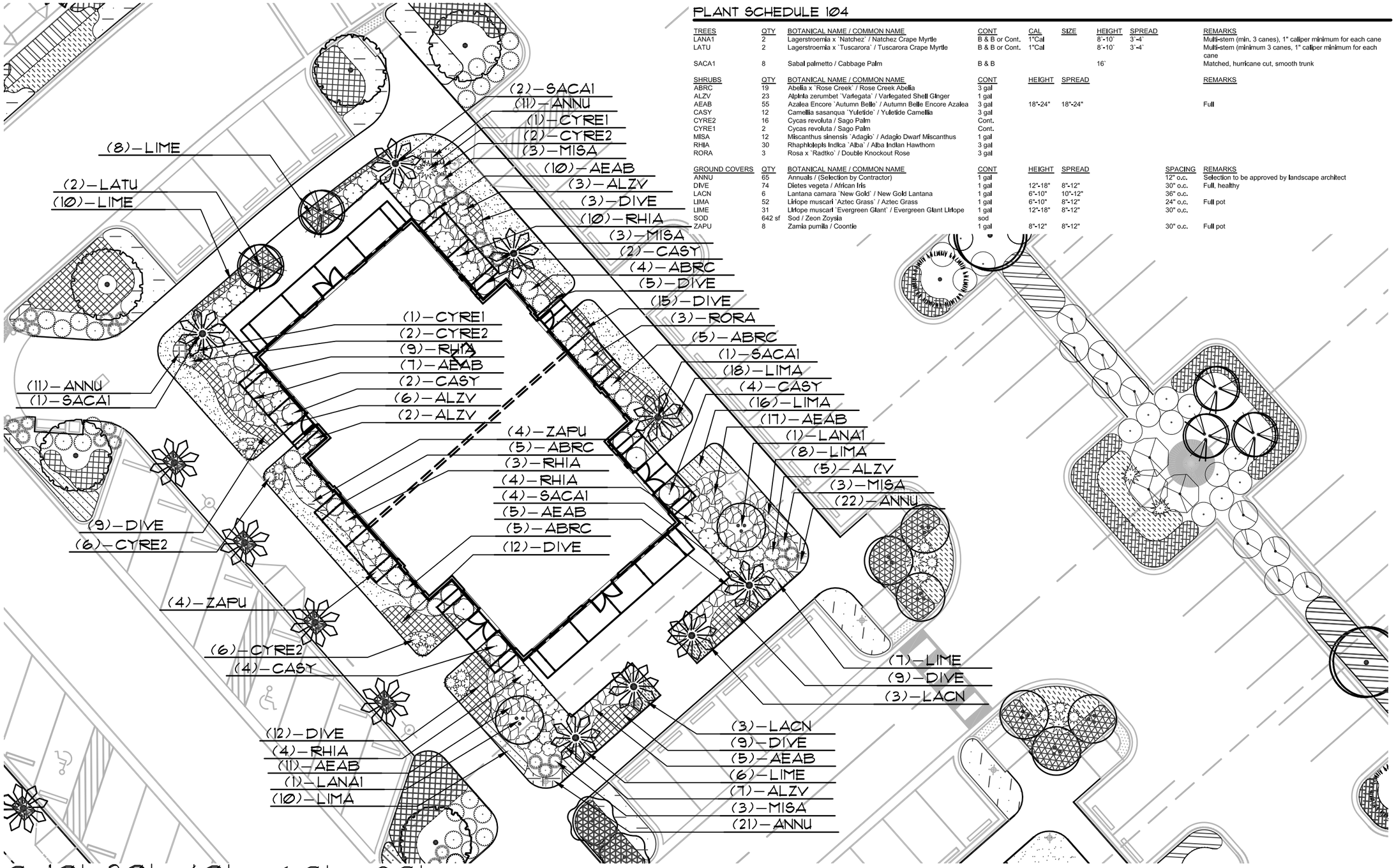

PLANT SCHEDULE 104

TREES	QTY	BOTANICAL NAME / COMMON NAME	CONT	CAL	SIZE	HEIGHT	SPREAD	REMARKS
LANA1	2	Lagerstroemia x `Natchez` / Natchez Crape Myrtle	B & B or Cont.	1"Cal		8`-10`	3`-4`	Multi-stem (min. 3 canes), 1" caliper minimum for each cane
LATU	2	Lagerstroemia x `Tuscarora` / Tuscarora Crape Myrtle	B & B or Cont.	1"Cal		8`-10`	3`-4`	Multi-stem (minimum 3 canes, 1" caliper minimum for each cane
SACA1	8	Sabal palmetto / Cabbage Palm	B & B			16`		Matched, hurricane cut, smooth trunk

SHRUBS	QTY	BOTANICAL NAME / COMMON NAME	CONT	HEIGHT	SPREAD	REMARKS
ABRC	19	Abelia x `Rose Creek` / Rose Creek Abelia	3 gal			
ALZV	23	Alpinia zerumbet `Variegata` / Variegated Shell Ginger	1 gal			
AEAB	55	Azalea Encore `Autumn Belle` / Autumn Belle Encore Azalea	3 gal	18"-24"	18"-24"	Full
CASY	12	Camellia sasanqua `Yuletide` / Yuletide Camellia	3 gal			
CYRE2	16	Cycas revoluta / Sago Palm	Cont.			
CYRE1	2	Cycas revoluta / Sago Palm	Cont.			
MISA	12	Miscanthus sinensis `Adagio` / Adagio Dwarf Miscanthus	1 gal			
RHIA	30	Rhaphiolepis indica `Alba` / Alba Indian Hawthorn	3 gal			
RORA	3	Rosa x `Radtko` / Double Knockout Rose	3 gal			

GROUND COVERS	QTY	BOTANICAL NAME / COMMON NAME	CONT	HEIGHT	SPREAD	SPACING	REMARKS
ANNU	65	Annuals / (Selection by Contractor)	1 gal			12" o.c.	Selection to be approved by landscape architect
DIVE	74	Dietes vegeta / African Iris	1 gal	12"-18"	8"-12"	30" o.c.	Full, healthy
LACN	6	Lantana camara `New Gold` / New Gold Lantana	1 gal	6"-10"	10"-12"	36" o.c.	
LIMA	52	Liriope muscari `Aztec Grass` / Aztec Grass	1 gal	6"-10"	8"-12"	24" o.c.	Full pot
LIME	31	Liriope muscari `Evergreen Giant` / Evergreen Giant Liriope	1 gal	12"-18"	8"-12"	30" o.c.	
SOD	642 sf	Sod / Zeon Zoysia	sod				
ZAPU	8	Zamia pumila / Coontie	1 gal	8"-12"	8"-12"	30" o.c.	Full pot

BLANCHARD & CALHOUN COMMERCIAL
Atlanta, Georgia

MATERIAL PAVING STUDY
SHELTER COVE MALL
REDEVELOPMENT
Hilton Head Island, SC

DRAWN BY:
JBR
CHECKED BY:
TPT

This drawing is an instrument of service & remains the property of Wood+Partners Inc. It may not be copied or reproduced in any manner without written permission.

#	REVISION	DATE	BY

DATE
04/29/14
PROJECT NUMBER
01-12001
SHEET TITLE
BUILDING 104
PLANTING PLAN

PLAN IS SUBJECT TO CHANGE.

Wood+Partners Inc. WPi
Landscape Architects
Land Planners
PO Box 23949 ■ Hilton Head Island, SC 29925
843.681.6618 ■ Fax 843.681.7086 ■ www.woodandpartners.com

SHEET NUMBER
1 of 1

BUILDING 104

SHELTER COVE TOWNE CENTRE

HILTON HEAD ISLAND, SC

Blanchard & Calhoun COMMERCIAL

NARRAMORE ASSOCIATES, INC.
Architects & Planners
AMERICAN INSTITUTE OF ARCHITECTS
P.O. Box 8438, Greenville, SC 29604
310 Mills Ave, Suite 203, Greenville, SC 29605
Phone: 864.242.9881
Fax: 864.232.5202
email: plans@narramore.net

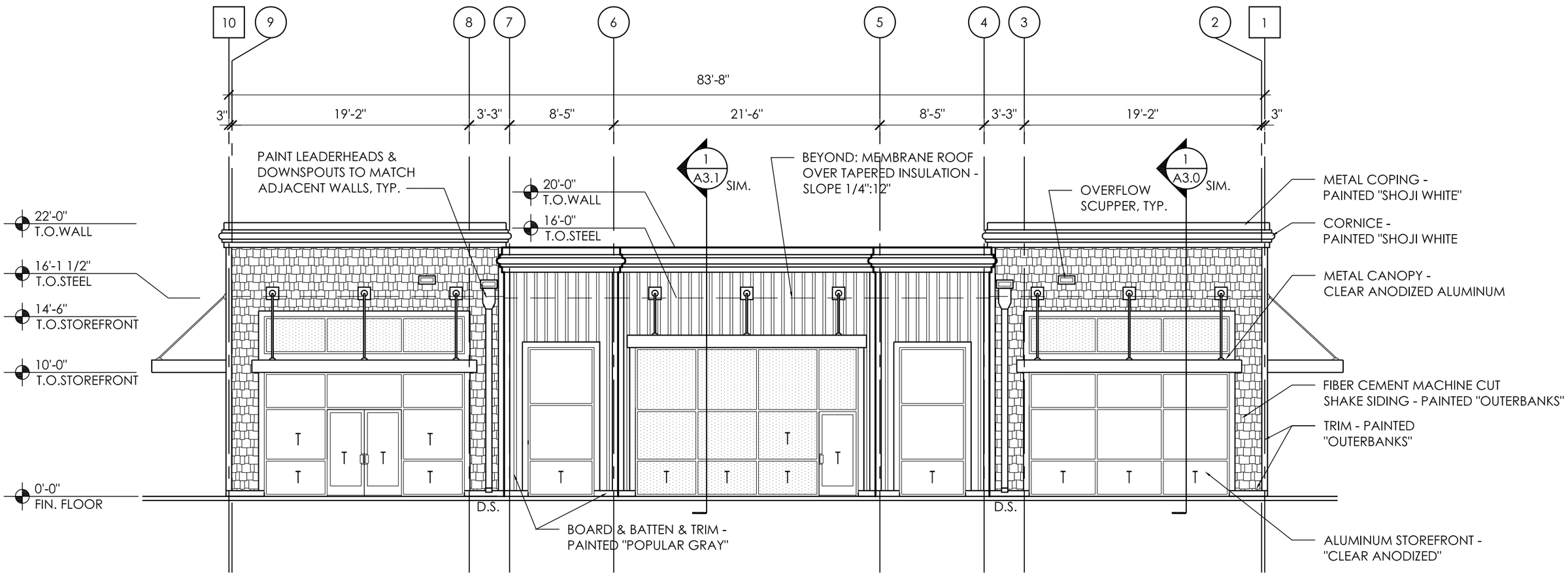

2

EAST ELEVATION

SCALE: 1/8" = 1'-0"

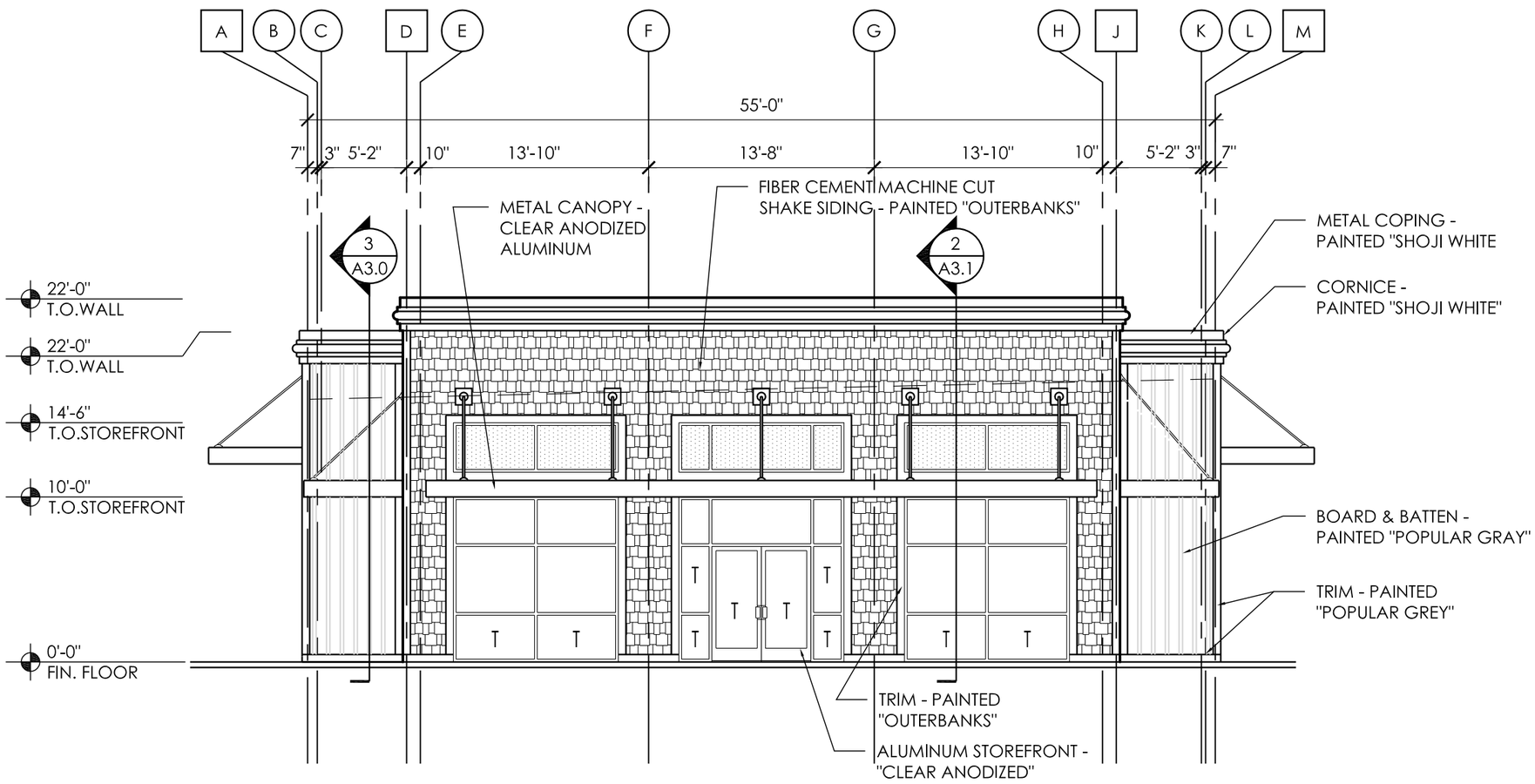

4

NORTH ELEVATION

SCALE: 1/8" = 1'-0"

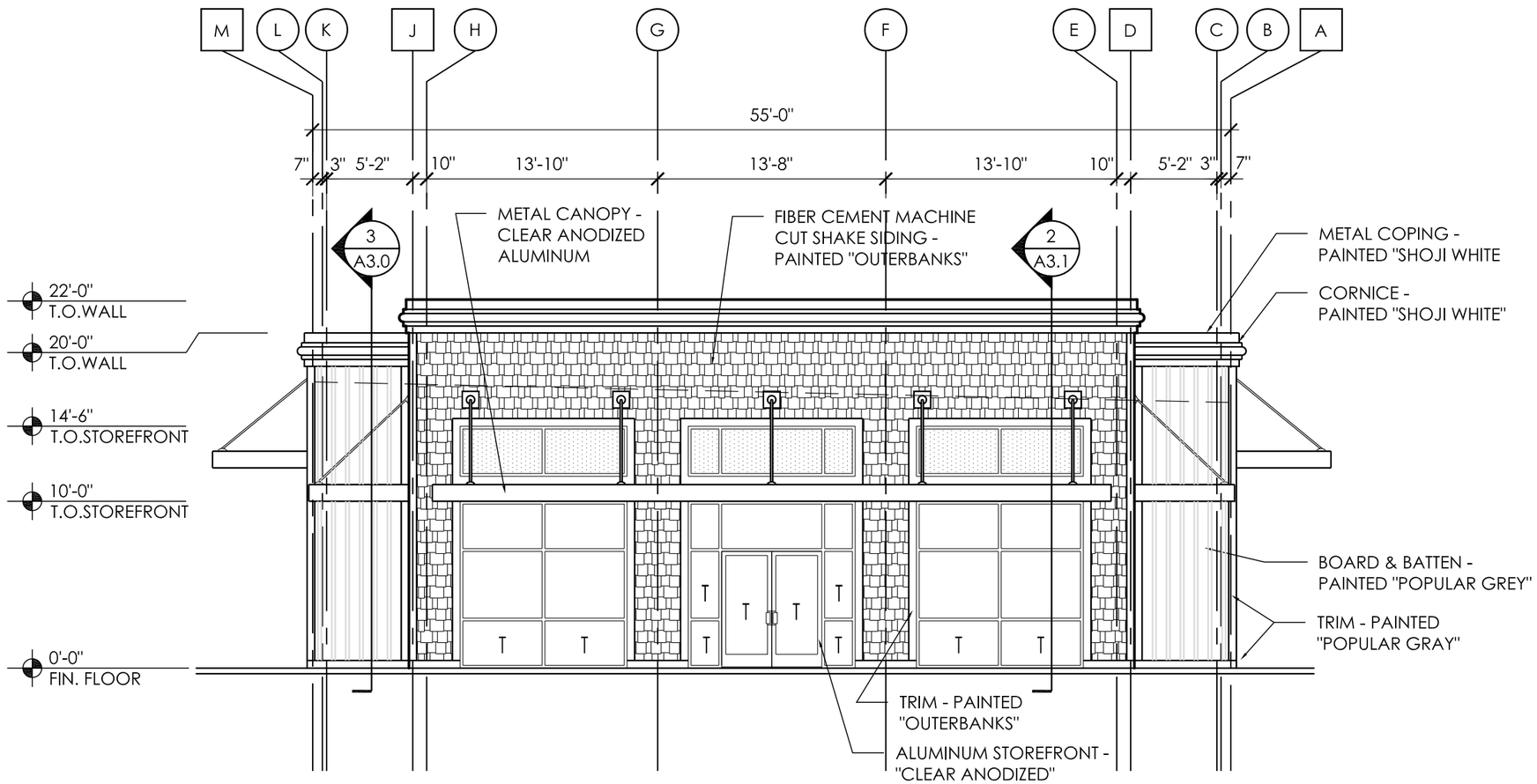

3

SOUTH ELEVATION

SCALE: 1/8" = 1'-0"

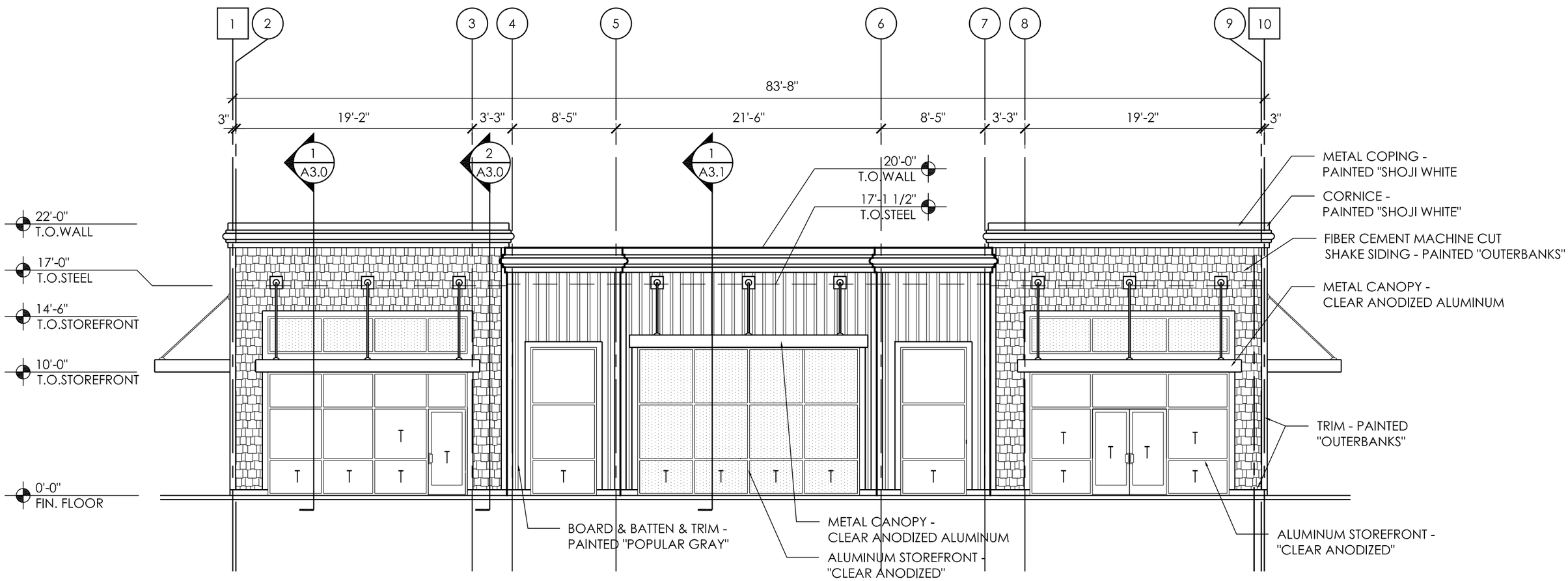

1

WEST ELEVATION

SCALE: 1/8" = 1'-0"

SHELTER COVE TOWNE CTR. BLDG. 104

32 SHELTER COVE LANE - UNITS 150 & 151
HWY. 278, MILE MARKER 8
HILTON HEAD, SC 29928

DEVELOPED BY

BLANCHARD & CALHOUN COMMERCIAL

2743 PERIMETER PARKWAY
BUILDING 100, SUITE 370
AUGUSTA, GA 30909

ARCHITECT'S JOB NUMBER: 13916

ISSUE DATE:
03/26/2014

OWNER:
BLANCHARD + CALHOUN
2743 PERIMETER PARKWAY
BUILDING 100, SUITE 370
AUGUSTA, GA 30909

ARCHITECT:
NARRAMORE ASSOCIATES, INC.
DESIGNER OF RECORD: DAVID L. NARRAMORE, AIA
310 MILLS AVE., STE. 203
GREENVILLE, SC 29605
864.242.9881

CIVIL ENGINEER:
WARD EDWARDS ENGINEERING
P.O. BOX 381
BLUFFTON, SC 29910
843-837-5250

STRUCTURAL ENGINEER:
BRITT PETERS + ASSOCIATES
DESIGNER OF RECORD: STEVEN DOVER
101 W. CAMPERDOWN WAY SUITE 601
GREENVILLE, SC 29601
864-271-8869

MECHANICAL ENGINEER:
LeBLANC-WELCH
DESIGNER OF RECORD: DAVID C. BONDS
25 WOODS LAKE RD., STE. 405
GREENVILLE, SC 29607
864-271-6535

ELECTRICAL ENGINEER:
ROGER S. PASSMORE, P.E.
719 LAURENS RD., STE. 100
GREENVILLE, SC 29607
864-235-3374

PROJECT DATA

GENERAL

OCCUPANCY CLASSIFICATION - ASSEMBLY A-2
MERCANTILE GROUP M
CONSTRUCTION TYPE - IIB - UNSPRINKLED - UNPROTECTED

BUILDING CODE REFERENCES

THIS PROJECT WAS DESIGNED TO CONFORM TO THE FOLLOWING APPLICABLE CODES FOR THE LOCALITY.

INTERNATIONAL BUILDING CODE (2012)
INTERNATIONAL FIRE CODE (2012)
INTERNATIONAL PLUMBING CODE (2012)
INTERNATIONAL MECHANICAL CODE (2012)
INTERNATIONAL ENERGY CONSERVATION CODE (2009)
NATIONAL ELECTRICAL CODE (2011)

STRUCTURAL DESIGN CRITERIA

SEISMIC USE GROUP II SEISMIC DESIGN CATEGORY C

FLOOR: 100 PSF ROOF: 20 PSF

BUILDING AREA LIMITATIONS

ASSEMBLY A-2

ALLOWABLE AREA (TABLE 503) (see note below modification formulas)	= 9,500 S.F.
+AREA INCREASE IBC 506.2 (____ x 75%)	N/A
TOTAL ALLOWABLE AREA W/ AREA INCREASE	= 9,500 S.F.
TOTAL AREA PROVIDED	= 4,078 S.F. - O.K.

BUILDING HEIGHT LIMITATIONS

ALLOWABLE BUILDING HEIGHT (TABLE 503)	= 55'
ALLOWABLE NUMBER OF STORIES (TABLE 503)	= 2 STORIES
ACTUAL BUILDING HEIGHT (HIGHEST PARAPET)	= ±22'-0"
ACTUAL NUMBER OF STORIES	= 1 STORY

EGRESS REQUIREMENTS

OCCUPANT LOAD = (PER TENANT'S FLOOR PLAN)	(UNIT 104-A) = 59	
OCCUPANT LOAD = 30 S.F. PER OCCUPANT LOAD	(UNIT 104-B) = 67	TOTAL = 126 OCCUPANTS
(SEE TENANT UPFIT PLANS FOR EXACT SEAT COUNT)		

SHEET INDEX

SHEET	DESCRIPTION
INDEX	INDEX & COVER
S0.0	GENERAL NOTES
S1.0	FOUNDATION & ROOF FRAMING PLANS
S3.0	TYPICAL DETAILS
S3.1	TYPICAL DETAILS
S4.0	SECTIONS
S4.1	SECTIONS
A1.0	FLOOR PLAN
A1.1	ROOF PLAN
A1.2	SCHEDULES
A1.3	DETAILS
A2.0	EXTERIOR ELEVATIONS
A3.0	WALL SECTIONS
A3.1	WALL SECTIONS
A6.0	UNIT PLAN
A6.1	UNIT PLAN
P1.0	PLUMBING PLANS
M1.0	HVAC PLAN / DETAILS
E1.0	ELECTRICAL PLAN
E2.0	ELECTRICAL DETAILS

NARRAMORE ASSOCIATES, INC.
Architects & Planners
AMERICAN INSTITUTE OF ARCHITECTS

P.O. Box 8438, Greenville, SC 29604
310 Mills Ave, Suite 203, Greenville, SC 29605
Phone: 864.242.9881
Fax: 864.232.5202
email: plans@narramore-architects.com

NARRAMORE ASSOCIATES, INC.
Architects & Planners
AMERICAN INSTITUTE OF ARCHITECTS

P.O. Box 8438 Greenville, SC 29604
310 Mills Ave. Greenville, SC 29605

Phone: 864.242.9881
Fax: 864.232.5202
plans@narramore-architects.com

©2014, NARRAMORE ASSOCIATES, INC.
COPYRIGHT PROTECTED BY FEDERAL LAW

STATE OF SOUTH CAROLINA
NARRAMORE ASSOCIATES, A.I.A. ARCHITECTS, INC.
GREENVILLE, SC
884033
REGISTERED ARCHITECTS

SEAL
STATE OF SOUTH CAROLINA
DAVID L. NARRAMORE
GREENVILLE, SC
1402
REGISTERED ARCHITECT
3/26/14

Blanchard & Calhoun COMMERCIAL

2743 PERIMETER PKWY
BLDG 100 STE 370
AUGUSTA, GA 30909

SHELTER COVE TOWNE CTR-BLDG. 104
32 SHELTER COVE LANE - UNITS 150 & 151
HWY. 278, MILE MARKER 8
HILTON HEAD ISLAND, SC 29928

REVISIONS

DOCUMENT DATA
Building 104
PROJECT NUMBER
13916
ISSUE DATE
03-26-14

SHELTER COVE
HILTON HEAD, SC

INDEX

INDEX/COVER
BUILDING 104

GENERAL NOTES

I. GENERAL

A. STRUCTURAL DRAWINGS SHALL BE USED IN CONJUNCTION WITH THE ARCHITECTURAL, MECHANICAL, ELECTRICAL, SHOP DRAWINGS AND SPECIFICATIONS.

B. IT IS THE GENERAL CONTRACTOR'S RESPONSIBILITY TO OBTAIN ALL CONTRACT DOCUMENTS AND LATEST ADDENDA AND TO SUBMIT TO ALL SUBCONTRACTORS AND SUPPLIERS PRIOR TO THE SUBMITTAL OF SHOP DRAWINGS.

C. THE GENERAL CONTRACTOR SHALL COMPARE ALL CONTRACT DRAWINGS AND REPORT ANY DISCREPANCY BETWEEN DISCIPLINES AND WITHIN A GIVEN DISCIPLINE TO THE ARCHITECT AND ENGINEER PRIOR TO FABRICATION AND ERECTION.

D. IF A CONFLICT EXISTS AMONG THE STRUCTURAL DRAWINGS, GENERAL NOTES, OR THE SPECIFICATIONS, THE STRICTEST REQUIREMENTS, AS INDICATED BY THE ENGINEER, SHALL GOVERN.

E. THE CONTRACTOR SHALL COORDINATE ALL ELEVATIONS AND DIMENSIONS, INCLUDING BUT NOT LIMITED TO THOSE FOR OPENINGS IN WALLS AND IN ROOF AND FLOOR SYSTEMS, WITH THE ARCHITECTURAL, PLUMBING, ELECTRICAL, AND MECHANICAL PLANS.

F. ALL DIMENSIONS, ELEVATIONS, AND ANY OTHER CONDITIONS OF ANY EXISTING STRUCTURES OR OTHER FEATURES SHALL BE VERIFIED BY THE GENERAL CONTRACTOR AND ANY DISCREPANCIES WITH THE CONTRACT DRAWINGS REPORTED TO THE ARCHITECT AND ENGINEER BEFORE PROCEEDING WITH THE AFFECTED PART OF THE WORK. DURING THE CONSTRUCTION PROCESS, IT SHALL BE SOLELY THE CONTRACTOR'S RESPONSIBILITY TO MAINTAIN THE INTEGRITY OF THE EXISTING STRUCTURE AND TO PROTECT FROM DAMAGE ANY PORTIONS THAT ARE TO REMAIN.

G. THE COMPLETED LATERAL-FORCE RESISTING SYSTEMS AND DIAPHRAGMS ARE REQUIRED FOR THE STRUCTURE TO RESIST LATERAL LOADS AND PROVIDE STABILITY UNDER GRAVITY LOADS. DURING THE CONSTRUCTION PROCESS, THE CONTRACTOR SHALL PROVIDE ALL REQUIRED BRACING DURING CONSTRUCTION TO MAINTAIN THE STABILITY AND SAFETY OF ALL STRUCTURAL ELEMENTS UNTIL THE LATERAL-LOAD RESISTING OR STABILITY-PROVIDING SYSTEM IS COMPLETELY INSTALLED AND THE STRUCTURE IS COMPLETELY TIED TOGETHER.

H. UNLESS OTHERWISE NOTED, DETAILS SHOWN ON ANY DRAWING ARE TO BE CONSIDERED TYPICAL FOR ALL SIMILAR CONDITIONS.

I. THE CONTRACTOR SHALL BE SOLELY RESPONSIBLE FOR ALL CONSTRUCTION MEANS AND METHODS AND FOR SAFETY PRECAUTIONS AND PROGRAMS.

J. BRITT, PETERS & ASSOCIATES, INC. SHALL NOT BE RESPONSIBLE FOR THE ACTS OR OMISSION OF THE CONTRACTOR OR FOR THEIR FAILURE TO CARRY OUT THE WORK IN ACCORDANCE WITH THE CONTRACT DOCUMENTS.

K. PERIODIC SITE OBSERVATION BY BRITT, PETERS & ASSOCIATES, INC. IS SOLELY FOR THE PURPOSE OF DETERMINING IF THE WORK OF THE CONTRACTOR IS PROCEEDING IN ACCORDANCE WITH THE STRUCTURAL CONTRACT DOCUMENTS AND IS NOT EXHAUSTIVE OR CONTINUOUS TO CHECK THE QUALITY OR QUANTITY OF THE WORK.

L. THE BUILDING OWNER SHALL PROVIDE PERIODIC MAINTENANCE TO INSURE STRUCTURAL INTEGRITY. SUCH MAINTENANCE SHALL INCLUDE BUT NOT LIMITED TO PAINTING OF STEEL, PROTECTIVE COATING FOR CONCRETE, SEALANTS, CAULKED JOINTS, EXPANSION JOINTS, CONTROL JOINTS, SPALLS AND CRACKS IN CONCRETE, AND PRESSURE WASHING OF EXPOSED STRUCTURAL ELEMENTS.

II. DESIGN CRITERIA

A. THE CONTRACT DOCUMENTS ARE BASED ON THE REQUIREMENTS OF THE INTERNATIONAL BUILDING CODE, 2012 EDITION.

B. DEAD LOADS
1. TYPICAL ROOF SYSTEMS: (20 PSF TOTAL)
 a. MEP*: 10 PSF
 b. INSULATION & ROOFING: 10 PSF

* MISCELLANEOUS CEILING AND HANGING MECHANICAL LOADS SUCH AS DUCT WORK AND SPRINKLER PIPES.

C. LIVE LOADS
2. LIVE LOADS ARE BASED ON THE MORE RESTRICTIVE OF THE UNIFORM LOAD LISTED BELOW OR THE CONCENTRATED LOAD LISTED ACTING OVER A 6.25 SQUARE FOOT AREA EXCEPT FOR PARKING GARAGES WHICH ACT OVER AN AREA OF 20 SQUARE INCHES. LIVE LOADS HAVE BEEN REDUCED AS PRESCRIBED IN THE AFOREMENTIONED BUILDING CODE.

CATEGORY	UNIFORM LOAD (PSF)	CONCENTRATED LOAD (LBS)
a. RETAIL (GROUND FLOOR)	100	1,000
b. ORDINARY ROOF	20	300

D. DESIGN SNOW LOAD:

GROUND SNOW LOAD,	PG	0 PSF
FLAT ROOF SNOW LOAD,	PF	0 PSF
EXPOSURE FACTOR,	CE	1.0
SNOW THERMAL FACTOR,	CT	1.0
SNOW IMPORTANCE FACTOR,	IS	1.0
RAIN ON SNOW SURCHARGE		0 PSF

E. DESIGN WIND LOADS:

BASIC WIND SPEED (ULT/SERV),	Vult/Vasd	153 MPH/130 MPH (3 SECOND GUST)
RISK CATEGORY		II
EXPOSURE		D
INTERNAL PRESSURE COEFF	GCPI	±0.18

COMPONENTS AND CLADDING WIND LOADS (ULTIMATE PRESSURES):

Design Wind Pressure (psf):								
			Effective Wind Area (sqft)					
Walls:			10	20	50	100	200	500
Interior	Area 4	+	57.7	55.1	51.7	49.2	46.6	43.3
		-	-62.5	-59.9	-56.6	-54.0	-51.4	-48.1
Edge	Area 5	+	57.7	55.1	51.7	49.2	46.6	43.3
		-	-76.9	-71.8	-65.0	-59.9	-54.8	-48.1
Roof:			10	20	50	100	200	500
Interior	Area 1	+	25.6	24.0	21.9	20.3	20.3	20.3
		-	-63.0	-61.4	-59.3	-57.7	-57.7	-57.7
Edge	Area 2	+	57.7	55.1	51.7	49.2	46.6	43.3
		-	-105.8	-94.5	-79.6	-68.4	-68.4	-68.4
Corner	Area 3	+	57.7	55.1	51.7	49.2	46.6	43.3
		-	-105.8	-94.5	-79.6	-68.4	-68.4	-68.4
Overhang:			10	20	50	100	200	500
Interior	Area 1	+	16.0	16.0	16.0	16.0	16.0	16.0
		-	-90.8	-89.2	-87.1	-85.5	-74.3	-59.1
Edge	Area 2	+	16.0	16.0	16.0	16.0	16.0	16.0
		-	-90.8	-89.2	-87.1	-85.5	-74.3	-59.1
Corner	Area 3	+	16.0	16.0	16.0	16.0	16.0	16.0
		-	-149.6	-117.4	-74.9	-42.7	-42.7	-42.7
Parapet Design Pressure (psf):								
			Effective Wind Area (sqft)					
Parapet:			10	20	50	100	200	500
Edge	Area 2	+	152.2	137.6	118.3	103.8	101.1	97.5
		-	-106.5	-101.1	-94.0	-88.6	-83.2	-76.1
Corner	Area 3	+	152.2	137.6	118.3	103.8	101.1	97.5
		-	-121.7	-113.6	-102.9	-94.9	-86.8	-76.1

CORNER AND EDGE ZONES ARE 5'-6" WIDE.

F. SEISMIC LOADS:

SHORT PERIOD SPECTRAL RESPONSE ACCELERATION,	SS	0.406
1-SEC PERIOD SPECTRAL RESPONSE ACCELERATION,	S1	0.145
SHORT PERIOD DESIGN SPECTRAL RESPONSE ACCELERATION,	SDS	0.399
1-SEC PERIOD DESIGN SPECTRAL RESPONSE ACCELERATION,	SD1	0.215
RISK CATEGORY	II	
SEISMIC DESIGN CATEGORY	D	
SITE CLASS	D	
BASIC SEISMIC-FORCE RESISTING SYSTEM	STEEL ORDINARY CONCENTRICALLY BRACED FRAME	
RESPONSE MODIFICATION FACTOR,	R	3.25
DEFLECTION AMPLIFICATION FACTOR,	CD	3.25
SEISMIC IMPORTANCE FACTOR	IE	1.0
SEISMIC RESPONSE COEFFICIENT	CS	0.091
ANALYSIS PROCEDURE	EQUIVALENT LATERAL FORCE	
DESIGN BASE SHEAR	V	17 KIPS

G. THE CONTRACTOR SHALL VERIFY ALL MECHANICAL EQUIPMENT WEIGHTS, LOCATIONS AND ASSOCIATED OPENINGS WITH THE MECHANICAL CONTRACTOR AND SUBMIT SUCH INFORMATION PRIOR TO FABRICATION OF THE SUPPORTING STRUCTURE. PROMPTLY NOTIFY THE ENGINEER IF THE ACTUAL WEIGHT EXCEEDS THE WEIGHT SHOWN ON THE STRUCTURAL DRAWINGS.

H. PROVISIONS SHALL BE MADE IN THE DETAILING, FABRICATION, AND ERECTION OF ALL CLADDING, PARTITIONS, WALLS, ETC. TO ACCOUNT FOR FLOOR TO FLOOR DEFLECTIONS AND LATERAL FRAME DEFLECTION.

III. FOUNDATIONS

A. FOUNDATION DESIGN IS BASED ON THE GEOTECHNICAL ENGINEERING REPORT, "SHELTER COVE VILLAGE ON HILTON HEAD ISLAND, HILTON HEAD ISLAND, SOUTH CAROLINA", PREPARED BY TERRACON CONSULTANTS, INC. DATED JULY 12, 2011 (TERRACON PROJECT NO. ES115064).

B. CONTRACTOR SHALL OBTAIN A COPY OF THE SOILS REPORT AND ADHERE TO ALL RECOMMENDATION WITHIN, INCLUDING PREPARATION OF SOILS AT BUILDING PAD.

C. ALL SOILS WORK, INCLUDING BACKFILL OF UTILITY TRENCHES AND THE VERIFICATION OF BEARING CAPACITY OF SAME SHALL BE UNDER THE DIRECTION OF A QUALIFIED SOILS ENGINEER. PROXIMITY OF UTILITY TRENCHES TO BUILDING FOUNDATION SYSTEM SHALL BE AS APPROVED BY THE SOILS ENGINEER TO INSURE INTEGRITY OF THE BEARING SOILS.

D. ALL FOOTINGS SHALL BEAR ON UNDISTURBED EARTH OR ENGINEERED FILL AT ELEVATIONS SHOWN ON PLANS AND DETAILS. FLOOR SLABS SHALL BEAR ON A COMPACTED GRANULAR BASE. THE MOISTURE RETARDER SHALL BE PLACED BETWEEN THE STONE AND THE SLAB.

E. NO FOUNDATION CONCRETE SHALL BE INSTALLED UNTIL ALL FOUNDATION WORK HAS BEEN COORDINATED WITH UNDERGROUND UTILITIES. THE CONTRACTOR SHALL NOTIFY THE ENGINEER OF RECORD OF ALL CONFLICTS THAT EXIST BETWEEN FOOTINGS AND UTILITIES.

F. ALL FOUNDATIONS OR PORTIONS THEREOF, BELOW GRADE MAY BE EARTH FORMED BY NEAT EXCAVATIONS.

G. UNLESS OTHERWISE SHOWN, ALL FOOTINGS SHALL BE CENTERED ON WALLS AND/OR COLUMNS.

H. THE CONTRACTOR SHALL DETERMINE THE EXTENT OF CONSTRUCTION DEWATERING REQUIRED FOR THE EXCAVATION. THE CONTRACTOR SHALL SUBMIT TO THE GEOTECHNICAL ENGINEER FOR REVIEW THE PROPOSED PLAN FOR CONSTRUCTION DEWATERING, PRIOR TO EXCAVATION.

I. FOOTINGS SHALL NOT BE PLACED ON FROZEN SUBGRADE OR IN STANDING WATER.

J. ALLOWABLE BEARING PRESSURE:
1. SPREAD FOOTING 2,000 PSF

K. MINIMUM FOOTING BEARING DEPTH = -2'-0"

IV. CONCRETE

A. CONCRETE SHALL CONFORM TO THE FOLLOWING REQUIREMENTS:

CONCRETE 28 DAY COMPRESSIVE STRENGTH AND DENSITY REQUIREMENTS:

USAGE	STRENGTH (PSI)	CONC. TYPE
a. ALL CONCRETE NOT OTHERWISE SPECIFIED	4000	NWT
b. FOUNDATIONS WALLS, FOOTINGS, GRADE BEAMS	3000	NWT
c. SLAB-ON-GRADE	3000	NWT

1. INDICATED CONCRETE TYPES SHALL BE PROPORTIONED FOR MAXIMUM WATER CEMENT RATIO OF 0.45.
2. NWT = NORMAL WEIGHT CONCRETE
3. ALL CONCRETE SHALL HAVE ALLOWABLE UNIT SHRINKAGE OF 0.045% AT 28 DAYS. (SEE ASTM C157)
4. ALL SLABS TO RECEIVE MOISTURE SENSITIVE FLOOR COVERINGS SHALL HAVE MAXIMUM WATER/ CEMENT RATIO OF 0.45.
5. EXTERIOR CONCRETE SLABS SHALL HAVE 4% TO 6% ENTRAINED AIR

B. ALL CONCRETE CONSTRUCTION SHALL CONFORM TO THE CURRENT "ACI MANUAL OF CONCRETE PRACTICE".

C. PORTLAND CEMENT SHALL CONFORM TO ASTM C-150, TYPE I OR II.

D. ALL AGGREGATE FOR NORMAL WEIGHT CONCRETE SHALL MEET ASTM C 33.

E. ALL REINFORCEMENT SHALL CONFORM TO THE FOLLOWING SPECIFICATIONS:
1. ALL REINFORCING, UNO: ASTM A615 GRADE 60
2. DEFORMED BAR ANCHORS (DBA): ASTM A496 (75 KSI)
3. WELDED WIRE REINFORCEMENT (WWR):
 a. DEFORMED WIRE: ASTM A 497 (70 KSI)
4. STEEL FIBERS: ASTM A820 TYPE I, II, & V
5. MACROSYNTHETIC FIBERS: ASTM D7508

F. CONCRETE FOR COMPOSITE STEEL DECK SHALL BE REINFORCED FOR TEMPERATURE & SHRINKAGE BY ONE OF THE FOLLOWING METHODS:
1. WWR: WELDED WIRE REINFORCEMENT AS SPECIFIED ON PLANS BUT NOT LESS THAN 6X6-W1.4XW1.4 WWR
2. STEEL FIBERS: UNO STEEL FIBERS MAY BE USED TO SUBSTITUTE WWR WHEN ADDED TO CONCRETE CONFORMING TO ASTM C1116, TYPE I. DOSAGE RATES SHALL BE DETERMINED BY THE FIBER MANUFACTURER FOR THE APPLICATION, BUT NOT LESS THAN 25 LB/CU. YD.
3. MACROSYNTHETIC FIBERS: UNO MACROSYNTHETIC FIBERS MAY BE USED TO SUBSTITUTE WWR WHEN ADDED TO CONCRETE CONFORMING TO ASTM C1116, TYPE III. DOSAGE RATES SHALL BE DETERMINED BY THE FIBER MANUFACTURER FOR THE APPLICATION, BUT NOT LESS THAN 4 LB/CU YD.

G. CONCRETE FOR SLAB-ON-GRADE SHALL BE REINFORCED FOR TEMPERATURE OR SHRINKAGE BY ONE OF THE FOLLOWING METHODS:
1. WWR: WELDED WIRE REINFORCEMENT AS SPECIFIED ON PLANS.
2. FIBERS: UNO STEEL FIBERS OR MACROSYNTHETIC FIBERS MAY BE USED TO SUBSTITUTE WWR. DOSAGE RATES SHALL BE DETERMINED BY THE FIBER MANUFACTURER FOR THE APPLICATION, BUT NOT LESS THAN 33 LB/CU YD. FOR STEEL FIBERS OR 3 LB/CU YD. FOR MACROSYNTHETIC FIBERS.

H. REINFORCEMENT DETAILING:
1. REINFORCEMENT SHALL BE DETAILED AND PLACED IN ACCORDANCE WITH ACI 315.
2. DEVELOPMENT AND SPLICE LENGTHS ARE IN TENSION UNLESS OTHERWISE INDICATED AND SHALL BE AS TABULATED IN THE SPLICE LENGTH TABLE, UNLESS OTHERWISE INDICATED.
3. LAP WWR ONE CROSSWIRE SPACING PLUS 2".
4. PROVIDE CORNER BARS AT ALL FOOTINGS AND WALL INTERSECTIONS TO MATCH HORIZONTAL REINFORCING SIZE AND SPACING. AT INTERSECTIONS OF CONTINUOUS SPREAD FOOTINGS EXTEND ALL BARS TO FAR SIDE OF INTERSECTING FOOTING
5. REINFORCEMENT SHALL BE SECURELY PLACED TO PREVENT DISPLACEMENT DURING CONCRETE PLACEMENT. PROVIDE THE FOLLOWING CONCRETE COVER FOR REINFORCING [ACI 318 SECTION 7.7 AND IBC TABLE 720.1], UNLESS SPECIFICALLY DETAILED OTHERWISE:
 a. CAST AGAINST EARTH 3"
 b. EXPOSED TO EARTH/WEATHER
  #6 THRU #18 2"
  #5 & SMALLER 1 1/2"
 c. SLABS, WALLS, JOISTS
  #11 & SMALLER 3/4"
7. PROVIDE DOWELS TO MATCH REINFORCEMENT SIZE AND SPACING INDICATED FOR ALL STRUCTURAL ELEMENTS, UNLESS OTHERWISE INDICATED.

I. FOUNDATION WALLS, GRADE BEAMS AND FOOTINGS SHALL BE CAST IN ALTERNATE PANELS NOT TO EXCEED 60'-0" IN LENGTH. SHEAR KEYS SHALL BE PROVIDED AT EACH CONSTRUCTION JOINT AND SHALL BE LOCATED AT 1/3 POINTS OF SPANS. .

J. SLABS AND BEAMS OR JOISTS SHALL BE CAST MONOLITHICALLY UNLESS OTHERWISE INDICATED.

K. CHAMFER ALL PERMANENTLY EXPOSED CONCRETE EDGES 3/4 INCH, UNO.

L. SEE ARCHITECTURAL AND MECHANICAL DRAWINGS FOR LOCATIONS OF OPENINGS AND SLEEVES IN CONCRETE WALLS AND SUPPORTED FLOORS. SPREAD REINFORCEMENT AT OPENINGS AND SLEEVES UNLESS OTHERWISE SHOWN. DO NOT CUT REINFORCEMENT. SEE TYPICAL REINFORCEMENT DETAILS FOR OPENINGS IN SLABS AND WALLS FOR ADDITIONAL REQUIREMENTS.

M. NO HOLES OR OPENINGS THROUGH FOUNDATION WALLS AND/OR FOOTINGS WITHOUT ENGINEER'S APPROVAL.

N. ALUMINUM SHALL NOT BE EMBEDDED IN ANY CONCRETE.

V. STRUCTURAL STEEL

A. ALL HOT ROLLED STEEL PLATES, SHAPES, SHEET PILING, AND BARS SHALL BE NEW STEEL CONFORMING TO ASTM SPECIFICATION A6-98A.

B. STRUCTURAL STEEL SHALL BE AS FOLLOWS, U.N.O.:
1. WIDE FLANGE SHAPES ASTM A992 FY = 50 KSI
2. STRUCTURAL RECTANGULAR TUBING ASTM A500 GRADE B FY = 46 KSI
3. ALL OTHER STRUCTURAL STEEL ASTM A36 FY = 36 KSI
4. CONNECTION MATERIALS:
 a. BEAM COLUMN STIFFENER PLATES AND DOUBLER PLATES: ASTM A572 GRADE 50
 b. ALL OTHER CONNECTION MATERIAL, U.N.O.: ASTM A36 UNLESS A HIGHER GRADE OF STEEL IS REQUIRED BY STRENGTH AND PROVIDED THE RESULTING SIZES ARE COMPATIBLE WITH THE CONNECTED MEMBERS.
8. ASTM A572 GRADE 50 IS ACCEPTABLE AS A SUBSTITUTE FOR A992

C. STRUCTURAL STEEL SHALL MEET THE LATEST AISC "SPECIFICATION FOR THE DESIGN, FABRICATION AND ERECTION OF STRUCTURAL STEEL FOR BUILDINGS".

D. THE CENTERLINES OF ALL COLUMNS AND BEAMS SHALL BE LOCATED ON COLUMN LINES UNLESS OTHERWISE SHOWN.

E. CONNECTIONS:
1. BOLTS SHALL BE A325N TYPE 1, UNLESS OTHERWISE INDICATED.
2. ALL BOLTS SHALL BE SNUG TIGHT U.N.O. BOLTS SHALL BE TIGHTENED UNTIL ALL PLIES OF THE JOINT ARE IN FIRM CONTACT.
3. BOLTS THAT ARE DESIGNATED AS SLIP CRITICAL SHALL BE FULLY TENSIONED TO THE MINIMUM LOADS AS INDICATED IN THE "SPECIFICATION OF STRUCTURAL JOINTS USING ASTM325 OR A490 BOLTS".
4. ANCHOR RODS SHALL CONFORM TO ASTM F1554, GRADE 36, UNLESS NOTED OTHERWISE.
5. THREADED RODS SHALL CONFORM TO ASTM A36
6. BOLTED MOMENT CONNECTIONS SHALL BE SLIP-CRITICAL CONNECTIONS. OTHER CONNECTIONS SHALL BE BEARING CONNECTIONS WITH THREADS INCLUDED IN SHEAR PLANES.
7. WELDING SHALL CONFORM TO THE STANDARDS SET FORTH IN AWS PUBLICATION, "WELDING IN BUILDING CONSTRUCTION".
8. UNLESS NOTED OTHERWISE, ELECTRODES FOR WELDING SHALL CONFORM TO E70XX (SMAW), F7XX-EXXX (SAW), ER70S-X (GMAW), OR E7XT-X (FCAW).
9. WELDS INDICATED "CJP" SHALL BE COMPLETE JOINT PENETRATION GROOVE WELDS. FABRICATOR SHALL PRODUCE COMPLETE JOINT PENETRATION GROOVE WELDS WHICH CONFORM TO ALL AWS D1.1 QUALIFIED WELD REQUIREMENTS AND WHICH ARE APPLICABLE TO THE SPECIFIC CONDITIONS SHOWN.
10. ALL ERECTION DRAWINGS SHALL SHOW ALL FIELD WELDS REQUIRED.
11. ALL STEEL BEAMS BEARING ON MASONRY TO HAVE MINIMUM OF 8" BEARING LENGTH.
12. CONNECTION DETAILS NOT COMPLETELY DETAILED ON THE DRAWINGS SHALL BE DESIGNED BY THE CONTRACTOR'S ENGINEER TO RESIST FORCES INDICATED ON THE DRAWINGS. INDICATED FORCES ARE BASED ON FACTORED LOADS AND ARE INTENDED FOR USE WITH THE LOAD AND RESISTANCE FACTOR DESIGN METHOD. WHERE NONE ARE INDICATED, BEAMS SHALL BE DESIGNED FOR AN END REACTION EQUAL TO 1/2 OF THE TOTAL UNIFORM LOAD CAPACITY TABULATED IN THE UNIFORM LOAD TABLES OF THE AISC MANUAL. THE CONTRACTOR SHALL EMPLOY THE ASSISTANCE OF A PROFESSIONAL ENGINEER REGISTERED IN THE STATE OF THE PROJECT. DESIGN CALCULATIONS FOR THE CONNECTIONS DESIGNED BY THE SPECIALTY ENGINEER SHALL BE SUBMITTED FOR THE FILES OF THE ARCHITECT AND ENGINEER. CALCULATIONS SHALL BEAR THE SEAL OF THE PROFESSIONAL ENGINEER REGISTERED IN THE STATE OF THE PROJECT. SHOP DRAWINGS CONTAINING CONNECTIONS FOR WHICH CALCULATIONS HAVE NOT BEEN RECEIVED WILL BE RETURNED UNCHECKED AS AN INCOMPLETE SUBMITTAL. CONNECTIONS ECCENTRICITY SHALL BE TAKEN INTO ACCOUNT WHEN DESIGNED AND DETAILING THE CONNECTION.

F. WHERE THE WORK OF OTHER TRADES REQUIRES CUTS, HOLES, ETC., IN STRUCTURAL STEEL MEMBERS, CUTS, HOLES, ETC., SHALL BE MADE IN THE SHOP AND SHALL BE SHOWN ON THE SHOP DRAWINGS. MAKING HOLES OR CUTS IN STRUCTURAL STEEL MEMBERS IN THE FIELD WILL NOT BE PERMITTED WITHOUT SPECIFIC APPROVAL OF THE ENGINEER.

G. ALL EXPOSED TO VIEW MEMBERS SHALL MEET THE REQUIREMENTS OF AISC FOR ARCHITECTURALLY EXPOSED STRUCTURAL STEEL.

H. BAR GRATINGS SHALL BE STEEL 1 1/2 x 3/16 GALVANIZED GRATING. GRATING SHALL BE CLAMPED TO SUPPORT BEAMS WITH GALVANIZED CLAMPS THAT DO NOT REQUIRE DRILLING OF BEAMS. EDGES AND OPENINGS IN GRATING MORE THAN 4" IN DIAMETER SHALL BE BANDED.

I. GROUT BELOW BASE PLATES SHALL BE NON-METALLIC, NON-SHRINK GROUT WITH A MINIMUM STRENGTH OF 6000 PSI WHEN BEARING ON 3000 PSI CONCRETE OR LESS, STRENGTH OF 8000 PSI WHEN BEARING ON CONCRETE BETWEEN 3000 AND 4000 PSI.

J. ALL STRUCTURAL STEEL SHALL BE SHIPPED WITH ONE COAT OF SHOP PRIMER EXCEPT THOSE MEMBERS THAT ARE GALVANIZED OR IN AREAS SCHEDULED TO RECEIVE FIRE PROOFING. THE CONTRACTOR SHALL BE RESPONSIBLE FOR COORDINATING AREAS TO BE FIRE PROOFED.

VI. DECKING

A. PROVIDE DECK IN LENGTHS ADEQUATE FOR A THREE-SPAN CONDITION WHERE POSSIBLE.

B. THE CONTRACTOR SHALL VERIFY THE SIZE AND LOCATION OF ALL OPENINGS, SLEEVES, INSERTS, ETC., WITH SHOP DRAWINGS OF THE EQUIPMENT TO BE INSTALLED.

C. STEEL DECK SHALL BE ATTACHED TO ALL MEMBERS ON WHOM IT BEARS.

VII. METAL STUD FRAMING

A. FABRICATION, AND ERECTION SHALL CONFORM TO AISI "SPECIFICATIONS FOR THE DESIGN OF COLD FORMED STEEL STRUCTURAL MEMBERS", LATEST EDITION. ALL METAL STUDS SHALL BE GALVANIZED.

B. ALL 33 MIL AND 43 MIL STUDS, JOISTS, TRACK, BRIDGING, END CLOSURES, AND ACCESSORIES SHALL BE FORMED FROM STEEL THAT CORRESPONDS TO THE REQUIREMENTS OF AISI "SPECIFICATIONS FOR THE DESIGN OF COLD FORMED STEEL STRUCTURAL MEMBERS" WITH A MINIMUM YIELD OF 33 KSI U.N.O. ALL 54 MIL AND THICKER MEMBERS SHALL HAVE A MINIMUM YIELD OF 50 KSI.

C. ALL MATERIAL AND ACCESSORIES SHALL BE FORMED FROM STEEL HAVING A G-60 GALVANIZED COATING MEETING ASTM A 635.

D. UNLESS NOTED OTHERWISE, ALL SCREWS OR PINS SHALL BE NON-CORROSIVE NO. 8-18 (D=.125") OR LARGER. DO NOT USE STAINLESS STEEL OR COPPER-COATED FASTENERS.

E. UNLESS NOTED OTHERWISE, TRACKS SHALL BE THE SAME DEPTH AS STUDS OR JOISTS AND OF EQUAL OR THICKER GAUGE THAN STUDS OR JOISTS. TRACKS SHALL BE CONNECTED TO SUPPORT AT 16" O.C. MAX. STUDS OR JOISTS SHALL BE CONNECTED TO TRACKS AT EACH SIDE.

F. THE QUANTITY OF STUDS AND JOISTS DISPLACED OR CUT FOR OPENING SHALL BE PLACED HALF ON EACH SIDE OF OPENING PER METAL STUD HEADER SCHEDULE ON THIS SHEET.

G. INSTALLATION OF CURTAIN WALL FRAMING SHALL ACCOMMODATE VERTICAL DISPLACEMENT OF THE PRIMARY STRUCTURE.

H. THE DESIGN OF SLIP TRACKS SHALL CONFORM TO GUIDELINES ESTABLISHED IN SSMA TECHNICAL NOTE NO. 1 PUBLISHED JAN. 2001.

I. PROVIDE THE MANUFACTURER'S STANDARD TRACK, CLIP ANGLES, BRACING, REINFORCEMENTS, FASTENERS, AND ACCESSORIES AS RECOMMENDED BY THE MANUFACTURER FOR THE APPLICATION INDICATED AND AS NEEDED TO PROVIDE A COMPLETE FRAMING SYSTEM. UNLESS OTHERWISE NOTED, INSTALL THE FRAMING SYSTEM IN ACCORDANCE WITH THE MANUFACTURER'S WRITTEN INSTRUCTIONS AND RECOMMENDATIONS.

J. WALL SHEATHING SHALL BE FASTENED TO SUPPORTING FRAMING WITH NO. 10, FLAT-HEAD SELF-DRILLING TAPPING SCREWS WITH A MINIMUM HEAD DIAMETER OF 0.333 INCHES AT THE SPACING INDICATED BELOW UNLESS NOTED OTHERWISE IN THE SHEAR WALL SCHEDULE:
1. WALL EDGE______________________6"OC
2. SUPPORTED PANEL EDGES AWAY FROM EDGE OF WALL______6"OC
3. CENTER OF PANELS______________________12"OC

K. PREPUNCHED HOLES SHALL NOT BE LOCATED WITHIN 10 INCHES OF THE STUD SUPPORT LOCATIONS.

L. USE FLUX COVERED, MILD STEEL ELECTRODES AWS E-6012, E-6013, OR E-7014 FOR WELDING STEEL STUDS. ALL WELDING SHALL BE PERFORMED IN ACCORDANCE AWS PROCEDURES. CONSULT MANUFACTURER FOR EQUIPMENT RECOMMENDATIONS AND PROPER ELECTRODE SELECTION. TOUCH UP WELDED AREAS WITH A ZINC RICH PAINT.

VIII. SUBMITTALS

A. THE GENERAL CONTRACTORS SHALL REVIEW AND STAMP ALL SHOP DRAWINGS BEFORE SUBMITTING FOR REVIEW. SHOP DRAWINGS SHALL BE SUBMITTED TO THE ARCHITECT AND/OR ENGINEER AND HAVE THE ENGINEER'S SHOP DRAWING STAMP AFFIXED PRIOR TO FABRICATION. FABRICATION AND ERECTION SHALL BE FROM REVIEWED SHOP DRAWINGS.

B. A RECORD SET OF APPROVED SHOP DRAWINGS SHALL BE KEPT IN THE FIELD BY THE GENERAL CONTRACTOR.

C. ANY DEVIATION FROM, ADDITION TO, SUBSTITUTION FOR, OR MODIFICATION TO THE STRUCTURE OR ANY PART OF THE STRUCTURE DETAILED ON THE CONTRACT DOCUMENTS SHALL BE SUBMITTED IN WRITING TO THE ENGINEER FOR REVIEW. SHOP DRAWINGS SUBMITTED FOR REVIEW DO NOT CONSTITUTE "IN-WRITING" UNLESS IT IS CLEARLY NOTED THAT SPECIFIC CHANGES ARE BEING SUGGESTED.

D. THE CONTRACTOR SHALL PREPARE A LIST AND SCHEDULE OF ALL STRUCTURAL SUBMITTALS PRIOR TO CONSTRUCTION.

E. THE FOLLOWING SHOP DRAWINGS SHALL BE SUBMITTED BY THE CONTRACTOR FOR THE ENGINEER'S REVIEW:
1. MISCELLANEOUS STEEL
2. STRUCTURAL STEEL, SHOP AND ERECTION DRAWINGS (1, 3)
3. ROOF METAL DECK
4. CONCRETE MIX DESIGNS
5. REINFORCING STEEL

F. ITEMS MARKED (1) SHALL HAVE SHOP DRAWINGS SEALED BY A REGISTERED ENGINEER IN THE STATE WHERE THE PROJECT IS LOCATED. ITEMS MARKED (2) SHALL BE SUBMITTED TO ENGINEER FOR OWNER'S RECORD ONLY AND WILL NOT HAVE THE ENGINEER'S SHOP DRAWING STAMP AFFIXED. ITEMS MARKED (3) SHALL HAVE DESIGN CALCULATIONS SEALED BY A REGISTERED ENGINEER IN THE STATE WHERE THE PROJECT IS LOCATED.
1. CONTRACTOR SHALL SUBMIT ONE SET OF REPRODUCIBLES AND TWO SETS OF PRINTS FOR ALL SHOP DRAWINGS SPECIFIED TO BE RETURNED BY THE ENGINEER.
2. THE OMISSION FROM THE SHOP DRAWINGS OF ANY MATERIALS REQUIRED BY THE CONTRACT DOCUMENTS TO BE FURNISHED SHALL NOT RELIEVE THE CONTRACTOR OF THE RESPONSIBILITY OF FURNISHING AND INSTALLING SUCH MATERIALS, REGARDLESS OF WHETHER THE SHOP DRAWINGS HAVE BEEN REVIEWED AND APPROVED.

G. THE USE OF ELECTRONIC FILES OR REPRODUCTIONS OF THESE CONTRACT DOCUMENTS BY ANY CONTRACTOR, SUBCONTRACTOR, ERECTOR, FABRICATOR, OR MATERIAL SUPPLIER IN LIEU OF PREPARATION OF SHOP DRAWINGS SIGNIFIES THEIR ACCEPTANCE OF ALL INFORMATION SHOWN HEREON AS CORRECT, AND OBLIGATES THEMSELVES TO ANY JOB EXPENSE, REAL OR IMPLIED, ARISING DUE TO ANY ERRORS THAT MAY OCCUR HEREON.

SOUTH CAROLINA
Britt, Peters & Associates, Inc.
No. C00781
CERTIFICATE OF AUTHORIZATION

IX. SPECIAL INSPECTION AND TESTING (CHAPTER 17)

A. ALL TESTS AND INSPECTIONS SHALL BE PERFORMED BY AN INDEPENDENT TESTING AND INSPECTION AGENCY. THE SPECIAL INSPECTOR FROM THIS TESTING AGENCY SHALL OBSERVE THE WORK FOR CONFORMANCE TO THE DESIGN DRAWINGS AND SPECIFICATIONS.

B. THE SPECIAL INSPECTOR SHALL FURNISH INSPECTION REPORTS TO THE BUILDING OFFICIAL, THE ENGINEER OR ARCHITECT OF RECORD, AND ALL OTHER DESIGNATED INDIVIDUALS. ALL DISCREPANCIES SHALL BE BROUGHT TO THE ATTENTION OF THE CONTRACTOR FOR CORRECTION, THEN, IF NOT CORRECTED, TO THE PROPER DESIGN AUTHORITY AND TO THE BUILDING OFFICIAL.

C. THE SPECIAL INSPECTOR SHALL SUBMIT A FINAL SIGNED REPORT STATING WHETHER THE WORK REQUIRING SPECIAL INSPECTION WAS, TO THE BEST OF THE INSPECTOR'S KNOWLEDGE, IN CONFORMANCE WITH THE APPROVED DESIGN DRAWINGS, SPECIFICATIONS, SOILS REPORT AND APPLICABLE WORKMANSHIP PROVISIONS OF THE INTERNATIONAL BUILDING CODE.

D. MASONRY WORK SHALL HAVE SPECIAL INSPECTION AS DEFINED BY THE AFOREMENTIONED BUILDING CODE.

E. SEE SCHEDULE OF SPECIAL INSPECTIONS LOCATED ON SHEET S2.0.

PROTECTION OF OPENINGS:

GLAZED OPENINGS IN BUILDINGS LOCATED WITHIN 1 MILE OF THE COASTAL MEAN HIGH WATER LINE WHERE THE ULTIMATE DESIGN WIND SPEED VULT IS 130 OR GREATER OR IN AREAS WHERE THE ULTIMATE DESIGN WIND SPEED VULT IS 140 MPH OR GREATER SHALL BE PROTECTED FROM WIND-BORNE DEBRIS. GLAZED OPENING PROTECTION FOR WIND-BORNE DEBRIS SHALL MEET THE REQUIREMENTS OF SSTD 12, ASTM E 1886 AND ASTM E 1996 WITH MODIFICATIONS PER SECTION 1609.1.2.4 OF THE FBC, OR TAS 201, 202 AND 203 OR AAMA 506 REFERENCED THEREIN.

1. GLAZED OPENINGS LOCATED WITHIN 30 FEET OF GRADE SHALL MEET THE REQUIREMENTS OF THE LARGE MISSILE TEST OF ASTM E 1996.
2. GLAZED OPENINGS LOCATED MORE THAN 30 FEET ABOVE GRADE SHALL MEET THE PROVISIONS OF THE SMALL MISSILE TEST OF ASTM E 1996.

FOR RISK CATEGORY II BUILDINGS AND III BUILDINGS, EXCEPT HEALTH CARE FACILITIES, THE ULTIMATE DESIGN WIND SPEED VULT SHALL BE BASED ON FIGURE 1609A AND FOR RISK CATEGORY IV BUILDINGS AND RISK CATEGORY III HEALTH CARE FACILITIES, ULTIMATE DESIGN WIND SPEED VULT SHALL BE BASED ON FIGURE 1609B.

BRITT PETERS AND ASSOCIATES INC.
consulting engineers
101 W. Camperdown Way
Suite 601
Greenville, SC 29601
(864) 271-8869
Fax (864) 233-5140
www.brittpeters.com
BPA Job No. 13421

NARRAMORE ASSOCIATES, INC.
Architects & Planners
AMERICAN INSTITUTE OF ARCHITECTS
P.O. Box 8438 Greenville, SC 29604
310 Mills Ave. Greenville, SC 29605
Phone: 864.242.9881
Fax: 864.232.5202
plans@narramore-architects.com

©2014, NARRAMORE ASSOCIATES, INC.
COPYRIGHT PROTECTED BY FEDERAL LAW

SEAL

SOUTH CAROLINA PROFESSIONAL ENGINEER
STEVEN C. DOVER
3-26-14

Blanchard & Calhoun COMMERCIAL
2743 PERIMETER PKWY
BLDG 100 STE 370
AUGUSTA, GA 30909

SHELTER COVE TOWNE CTR-BLDG. 104
SHELTER COVE LANE
HWY. 278, MILE MARKER 8
HILTON HEAD ISLAND, SC 29928

REVISIONS

DOCUMENT DATA
Building 104
PROJECT NUMBER
13916
ISSUE DATE
03-26-14

SHELTER COVE
BLDG. 104

S0.0

General Notes

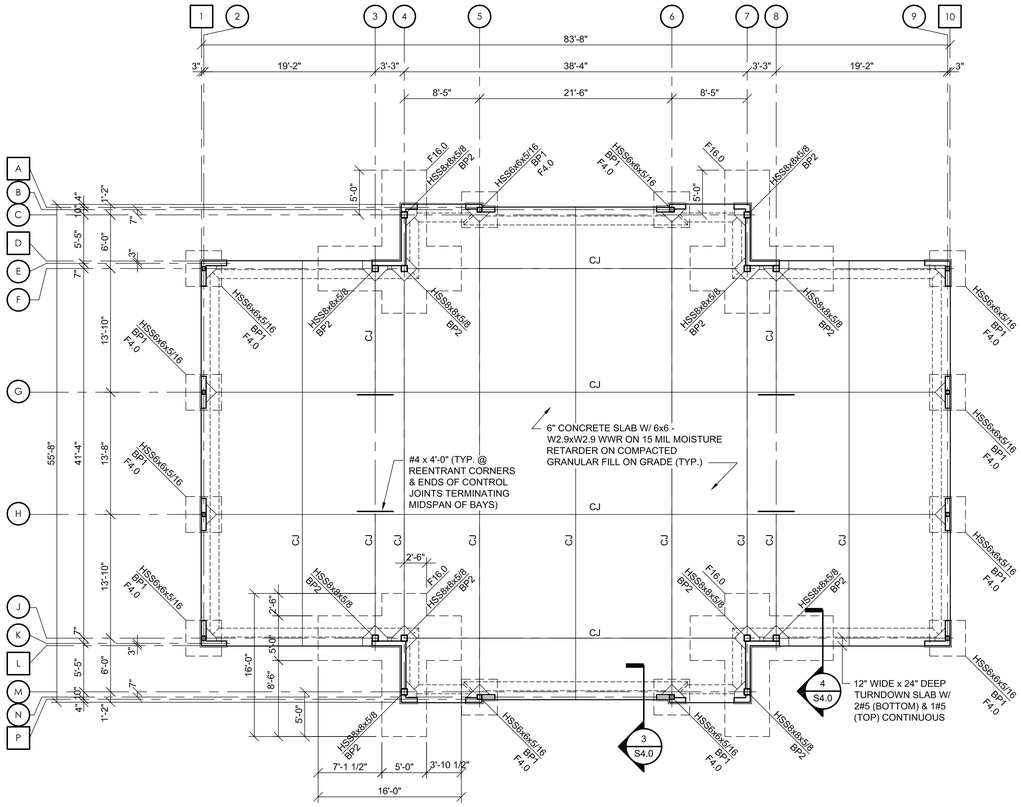

FOUNDATION PLAN

N

SCALE: 1/8"=1'-0"
FIN. FLR. EL. = 0'-0"
CJ DENOTES CONTROL JOINT OR CONSTRUCTION JOINT, REFERENCE SHEET S3.0 FOR DETAILS
TOP OF FTG. EL. = -2'-0" (TYP. U.N.O.)
F# DENOTES FOOTING TYPE. REFERENCE SCHEDULE THIS SHEET
REFER TO S3.0 FOR BASE PLATE & ANCHOR BOLT DETAILS

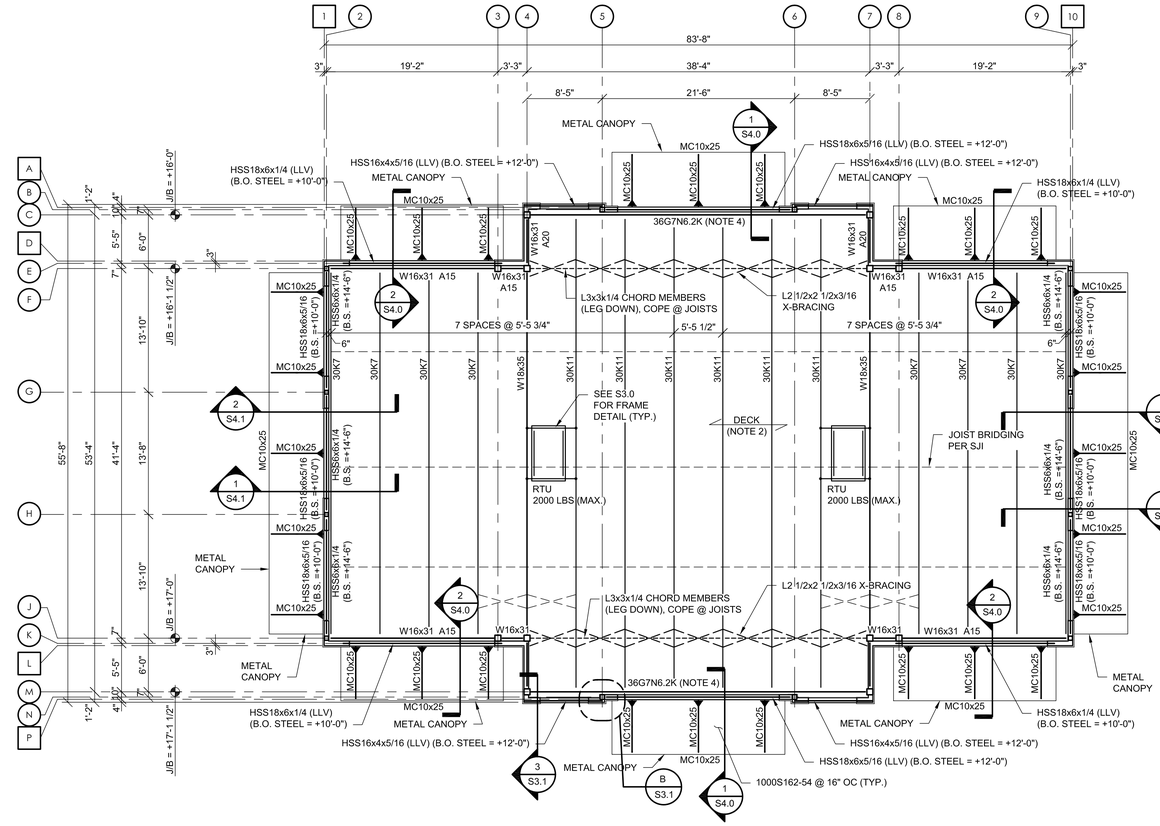

ROOF FRAMING PLAN

N

SCALE: 1/8"=1'-0"
J/B = JOIST BEARING

NOTE:
1. ROOF MEMBERS NEED TO BE DESIGNED WITH RTU UNITS LOCATED AS SHOWN. THE MAXIMUM UNIT WEIGHT IS 1000 LBS. (TYP. U.N.O.)
2. PROVIDE 1 1/2" 22 GAGE GALVANIZED ROOF DECK. REFER TO DETAIL ON S3.0 FOR DECK FASTENING.
3. JOIST MANUFACTURER TO DESIGN PERIMETER JOIST GIRDERS AND JOIST FOR AN ADDITIONAL 250 LBS PER FOOT DEAD LOAD.
4. JOIST MANUFACTURER TO DESIGN JOIST GIRDER FOR A 3/4" MAXIMUM LIVE LOAD DEFLECTION.
5. ▶— DENOTES MOMENT CONNECTION.
6. CONTACT ENGINEER IF RTU WEIGHT EXCEEDS 2000 LBS. EACH.

COLUMN FOOTING SCHEDULE

MARK	SIZE	THICKNESS	REINFORCING
F16.0	SEE PLAN	30"	SEE DETAIL A/S3.1
F4.0	4'-0" x 4'-0"	12"	(4) #5 EACH WAY

NARRAMORE ASSOCIATES, INC.
Architects & Planners
AMERICAN INSTITUTE OF ARCHITECTS
P.O. Box 8438 Greenville, SC 29604
310 Mills Ave. Greenville, SC 29605
Phone: 864.242.9881
Fax: 864.232.5202
plans@narramore-architects.com

©2014, NARRAMORE ASSOCIATES, INC.
COPYRIGHT PROTECTED BY FEDERAL LAW

SEAL
SOUTH CAROLINA PROFESSIONAL ENGINEER STEVEN C. DOVER
3-26-14

Blanchard & Calhoun COMMERCIAL
2743 PERIMETER PKWY
BLDG 100 STE 370
AUGUSTA, GA 30909

SHELTER COVE TOWNE CTR-BLDG. 104
SHELTER COVE LANE
HWY. 278, MILE MARKER 8
HILTON HEAD ISLAND, SC 29928

REVISIONS

SOUTH CAROLINA Britt, Peters & Associates, Inc. No. C00781 CERTIFICATE OF AUTHORIZATION

BRITT PETERS AND ASSOCIATES INC.
consulting engineers
101 W. Camperdown Way
Suite 601
Greenville, SC 29601
(864) 271-8869
Fax (864) 233-5140
www.brittpeters.com
BPA Job No. 13421

DOCUMENT DATA
Building 104
PROJECT NUMBER
13916
ISSUE DATE
03-26-14

SHELTER COVE
BLDG. 104

S1.0

Foundation and Roof Framing Plans

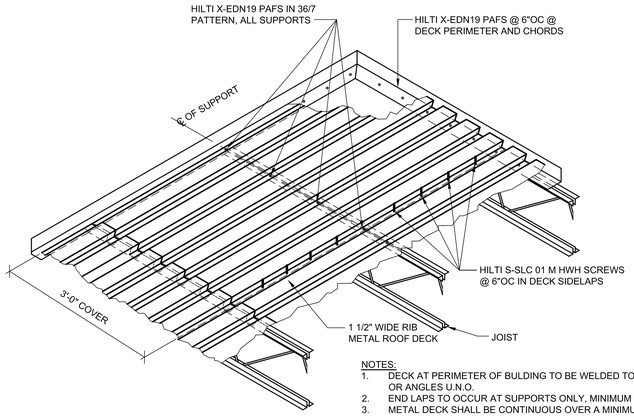

NOTES:
1. DECK AT PERIMETER OF BULDING TO BE WELDED TO BEAMS OR ANGLES U.N.O.
2. END LAPS TO OCCUR AT SUPPORTS ONLY, MINIMUM LAP = 2".
3. METAL DECK SHALL BE CONTINUOUS OVER A MINIMUM OF 2 SPANS.
4. BUTT WELD ALL SPLICES AT PERIMETER ANGLE.

ROOF DECK FASTENING PATTERN

3/4" = 1'-0"

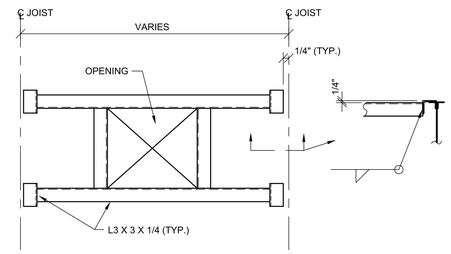

SQUARE OR RECT. FRAME DETAIL

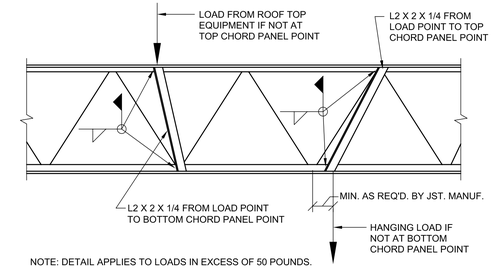

NOTE: DETAIL APPLIES TO LOADS IN EXCESS OF 50 POUNDS.

TYP. ROOF-TOP EQUIPMENT SUPPORT & HANGER SUPPORT DETAIL

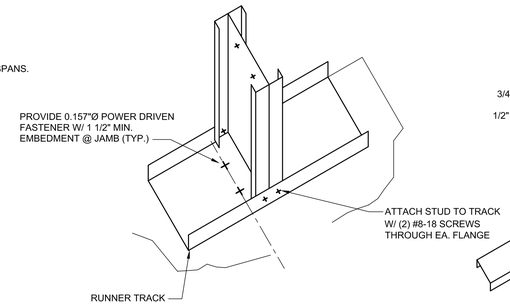

ANCHORAGE AT JAMBS

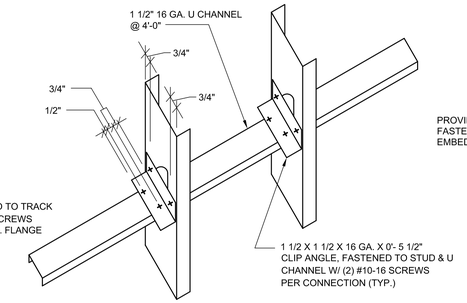

LATERAL BRIDGING

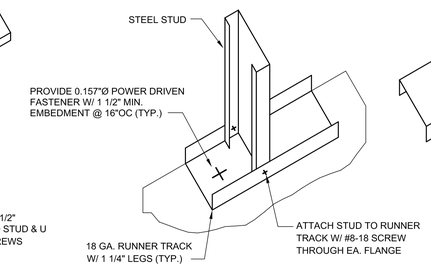

RUNNER TRACK ANCHORAGE

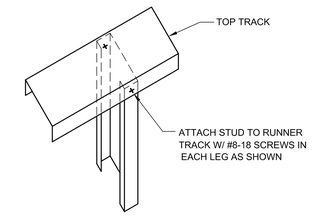

STUD TO TOP TRACK CONNECTION

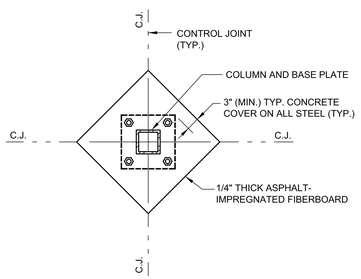

TYP. COL. ISOLATION JOINT

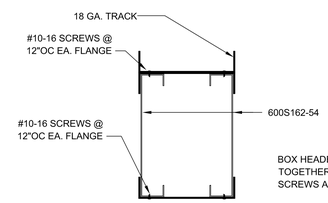

BOXED HEADER DETAIL

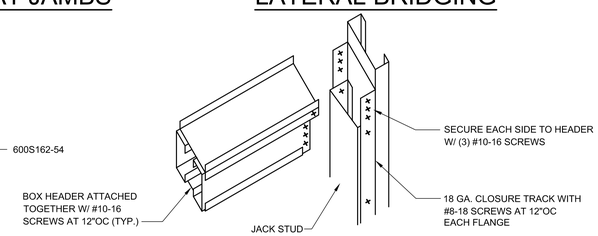

HEADER BOX CONNECTION

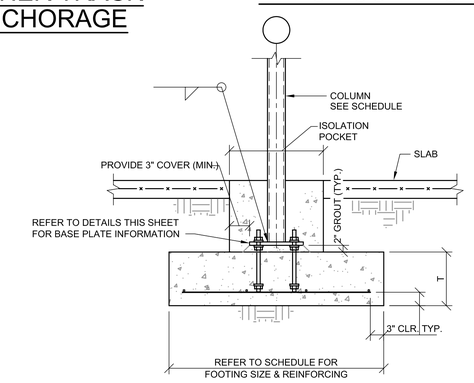

TYPICAL ISOLATION POCKET

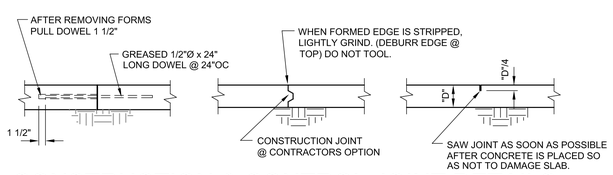

CONSTRUCTION & CONTROL JOINT DETAILS

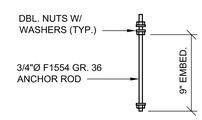

TYP. ANCHOR ROD DETAIL

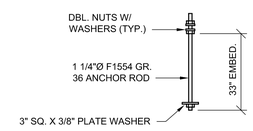

TYP. ANCHOR ROD DETAIL

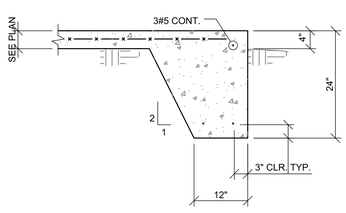

TYPICAL TURNDOWN DETAIL

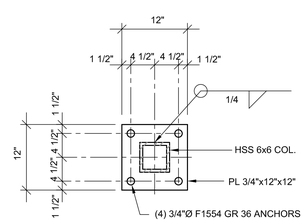

BP1

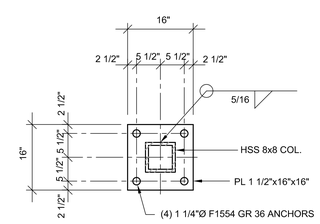

BP2

BASE PLATE DETAILS

NARRAMORE ASSOCIATES, INC.
Architects & Planners
AMERICAN INSTITUTE OF ARCHITECTS
P.O. Box 8438 Greenville, SC 29604
310 Mills Ave. Greenville, SC 29605
Phone: 864.242.9881
Fax: 864.232.5202
plans@narramore-architects.com

©2014, NARRAMORE ASSOCIATES, INC.
COPYRIGHT PROTECTED BY FEDERAL LAW

SOUTH CAROLINA Britt, Peters & Associates, Inc. No. C00781 CERTIFICATE OF AUTHORIZATION

SEAL

SOUTH CAROLINA PROFESSIONAL ENGINEER STEVEN C. DOVER 3-26-14

Blanchard & Calhoun COMMERCIAL
2743 PERIMETER PKWY
BLDG 100 STE 370
AUGUSTA, GA 30909

SHELTER COVE TOWNE CTR-BLDG. 104

SHELTER COVE LANE
HWY. 278, MILE MARKER 8
HILTON HEAD ISLAND, SC 29928

REVISIONS

DOCUMENT DATA
Building 104
PROJECT NUMBER
13916
ISSUE DATE
03-26-14

BRITT PETERS AND ASSOCIATES INC.
consulting engineers
101 W. Camperdown Way
Suite 601
Greenville, SC 29601
(864) 271-8869
Fax (864) 233-5140
www.brittpeters.com
BPA Job No. 13421

SHELTER COVE BLDG. 104

S3.0

Typical Details

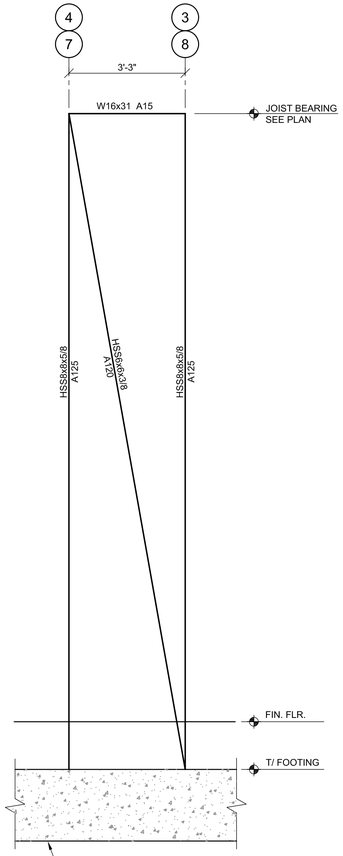

NOTE:
LOADS SHOWN ARE
FACTORED LOADS.

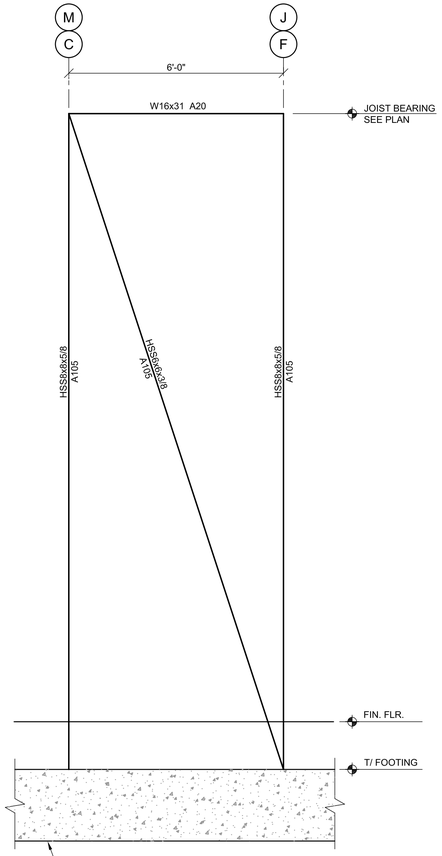

BRACED FRAME ELEVATIONS

1/2" = 1'-0"

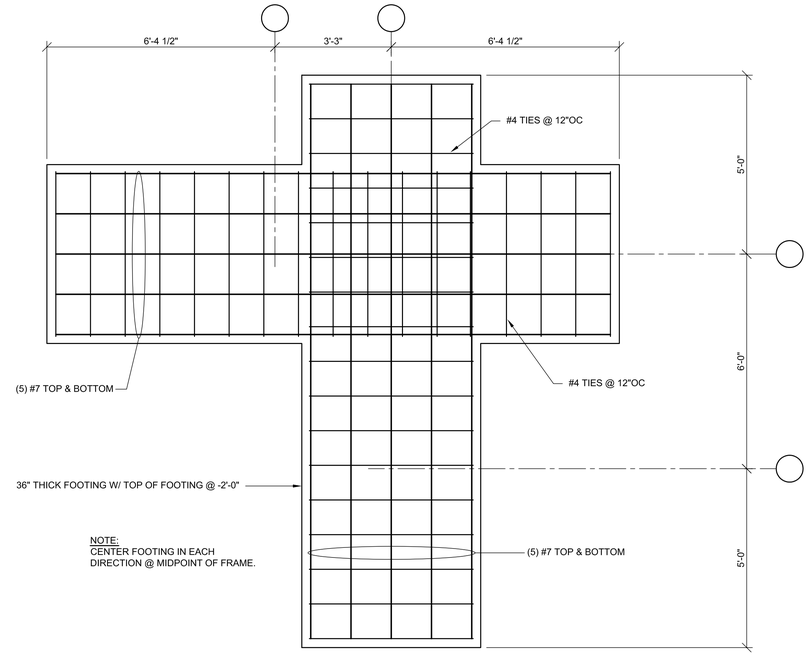

NOTE:
CENTER FOOTING IN EACH
DIRECTION @ MIDPOINT OF FRAME.

COLUMN FOOTING F16.0 DETAIL

1/2" = 1'-0" (A / S3.1)

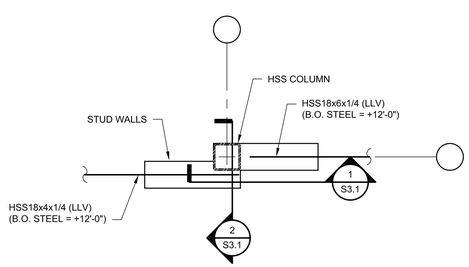

DETAIL

3/4" = 1'-0" (B / S3.1)

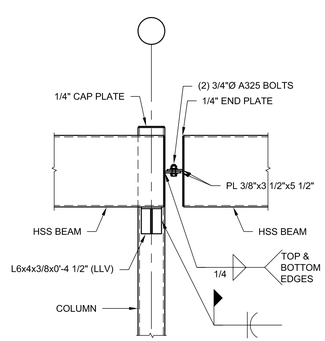

SECTION

3/4" = 1'-0" (1 / S3.1)

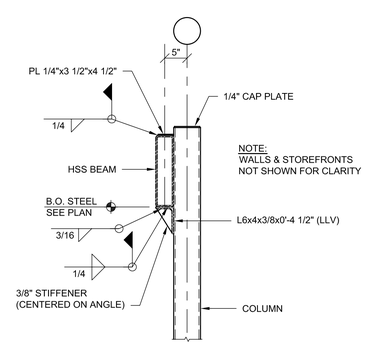

NOTE:
WALLS & STOREFRONTS
NOT SHOWN FOR CLARITY

SECTION

3/4" = 1'-0" (2 / S3.1)

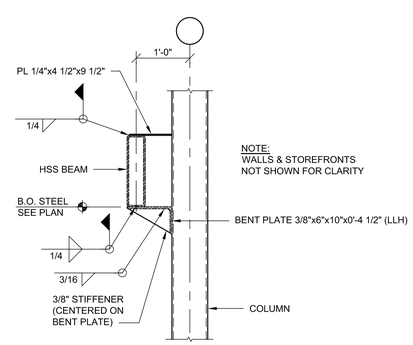

NOTE:
WALLS & STOREFRONTS
NOT SHOWN FOR CLARITY

SECTION

3/4" = 1'-0" (3 / S3.1)

NARRAMORE
ASSOCIATES, INC.
Architects & Planners
AMERICAN INSTITUTE OF ARCHITECTS
P.O. Box 8438 Greenville, SC 29604
310 Mills Ave. Greenville, SC 29605
Phone: 864.242.9881
Fax: 864.232.5202
plans@narramore-architects.com

©2014, NARRAMORE ASSOCIATES, INC.
COPYRIGHT PROTECTED BY FEDERAL LAW

SEAL

SOUTH CAROLINA
Britt, Peters & Associates, Inc.
No. C00781
CERTIFICATE OF AUTHORIZATION

SOUTH CAROLINA
Registered Professional Engineer
3-26-14
STEVEN C. DOVER

Blanchard & Calhoun
COMMERCIAL
2743 PERIMETER PKWY
BLDG 100 STE 370
AUGUSTA, GA 30909

SHELTER COVE TOWNE CTR-BLDG. 104

SHELTER COVE LANE
HWY. 278, MILE MARKER 8
HILTON HEAD ISLAND, SC 29928

REVISIONS

DOCUMENT DATA
Building 104
PROJECT NUMBER
13916
ISSUE DATE
03-26-14

BRITT PETERS AND ASSOCIATES INC.
consulting engineers
101 W. Camperdown Way
Suite 601
Greenville, SC 29601
(864) 271-8869
Fax (864) 233-5140
www.brittpeters.com
BPA Job No. 13421

SHELTER COVE
BLDG. 104

S3.1

Typical Details

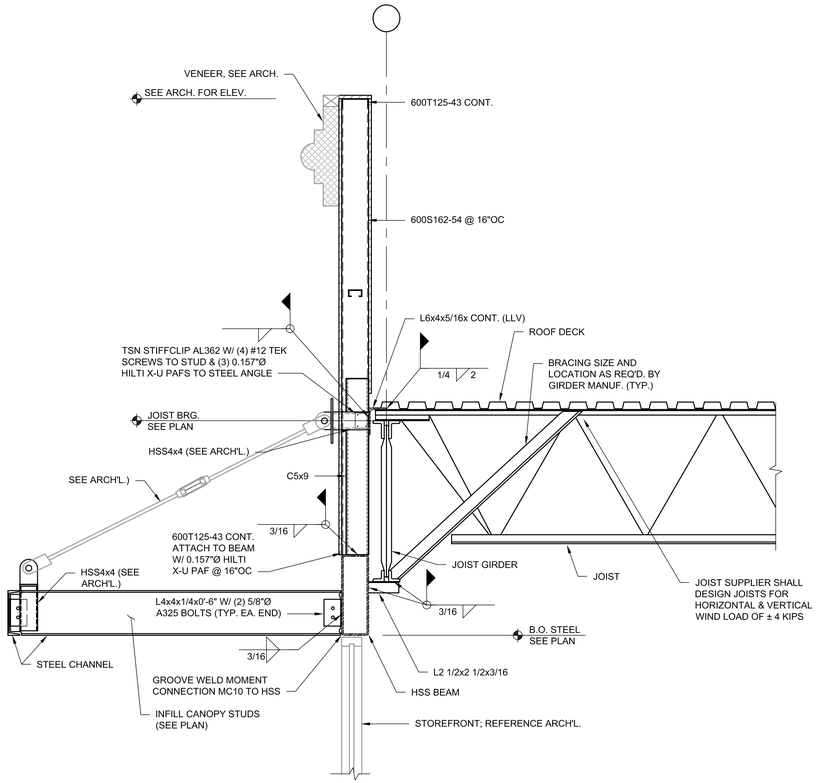

SECTION 1 S4.0
3/4" = 1'-0"

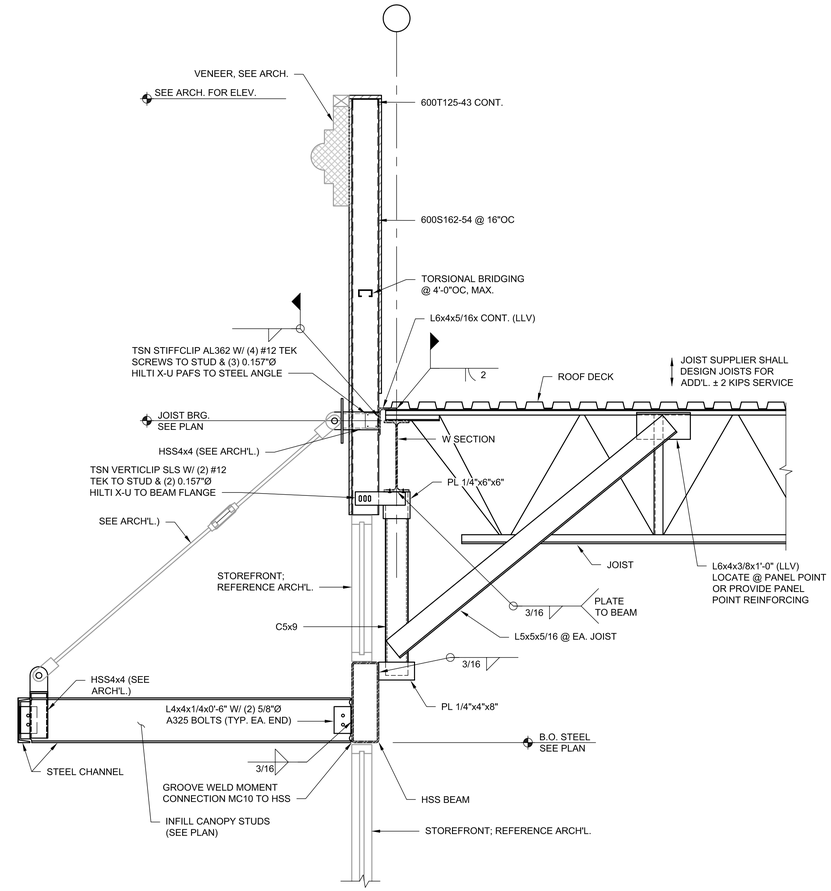

SECTION 2 S4.0
3/4" = 1'-0"

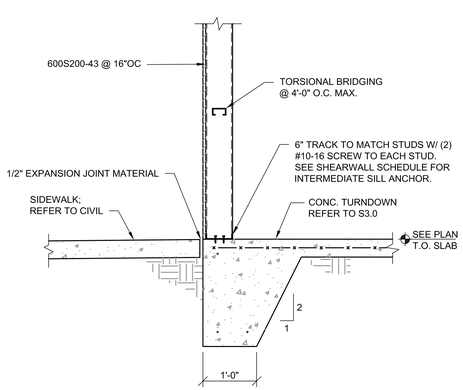

SECTION 3 S4.0
3/4" = 1'-0"

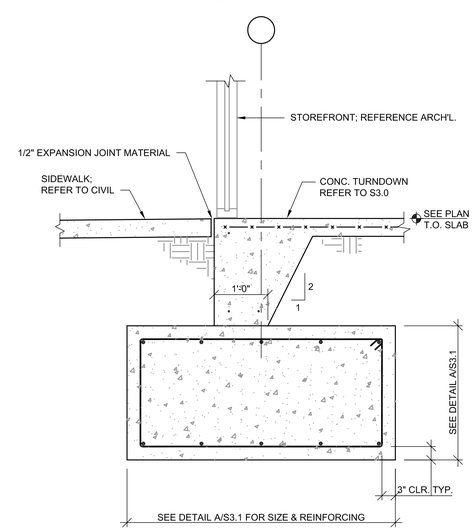

SECTION 3 S4.0
3/4" = 1'-0"

NARRAMORE ASSOCIATES, INC.
Architects & Planners
American Institute of Architects
P.O. Box 8438 Greenville, SC 29604
310 Mills Ave. Greenville, SC 29605
Phone: 864.242.9881
Fax: 864.232.5202
plans@narramore-architects.com
©2014, NARRAMORE ASSOCIATES, INC.
COPYRIGHT PROTECTED BY FEDERAL LAW

SOUTH CAROLINA
Britt, Peters & Associates, Inc.
No. C00781
CERTIFICATE OF AUTHORIZATION

SEAL
SOUTH CAROLINA
STEVEN C. DOVER
3-26-14

Blanchard & Calhoun COMMERCIAL
2743 PERIMETER PKWY
BLDG 100 STE 370
AUGUSTA, GA 30909

SHELTER COVE TOWNE CTR-BLDG. 104
SHELTER COVE LANE
HWY. 278, MILE MARKER 8
HILTON HEAD ISLAND, SC 29928

REVISIONS

DOCUMENT DATA
Building 104
PROJECT NUMBER
13916
ISSUE DATE
03-26-14

BRITT PETERS AND ASSOCIATES INC.
consulting engineers
101 W. Camperdown Way
Suite 601
Greenville, SC 29601
(864) 271-8869
Fax (864) 233-5140
www.brittpeters.com
BPA Job No. 13421

SHELTER COVE
BLDG. 104

S4.0

Sections

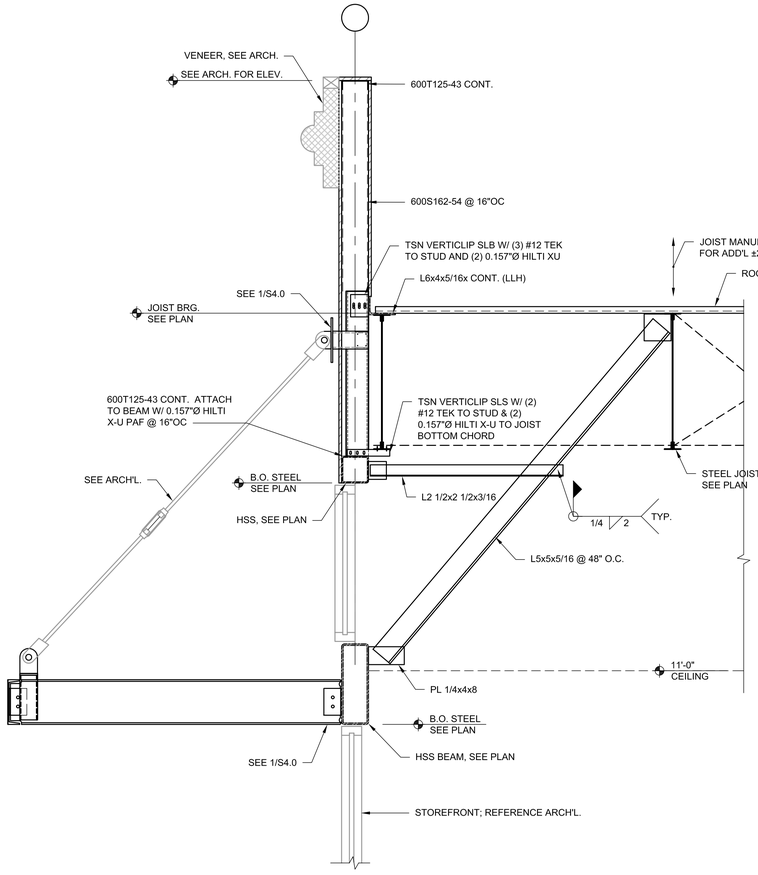

SECTION 1 / S4.1
3/4" = 1'-0"

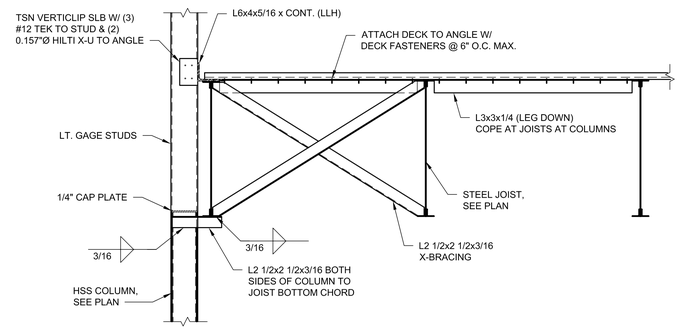

SECTION 2 / S4.1
3/4" = 1'-0"

NARRAMORE ASSOCIATES, INC.
Architects & Planners
AMERICAN INSTITUTE OF ARCHITECTS
P.O. Box 8438 Greenville, SC 29604
310 Mills Ave. Greenville, SC 29605
Phone: 864.242.9881
Fax: 864.232.5202
plans@narramore-architects.com
©2014, NARRAMORE ASSOCIATES, INC.
COPYRIGHT PROTECTED BY FEDERAL LAW

SEAL

Britt, Peters & Associates, Inc.
No. C00781
CERTIFICATE OF AUTHORIZATION
SOUTH CAROLINA
3-26-14
STEVEN C. DOVER

Blanchard & Calhoun COMMERCIAL
2743 PERIMETER PKWY
BLDG 100 STE 370
AUGUSTA, GA 30909

SHELTER COVE TOWNE CTR-BLDG. 104
SHELTER COVE LANE
HWY. 278, MILE MARKER 8
HILTON HEAD ISLAND, SC 29928

REVISIONS

DOCUMENT DATA
Building 104
PROJECT NUMBER
13916
ISSUE DATE
03-26-14

BRITT PETERS AND ASSOCIATES INC.
consulting engineers
101 W. Camperdown Way
Suite 601
Greenville, SC 29601
(864) 271-8869
Fax (864) 233-5140
www.brittpeters.com
BPA Job No. 13421

SHELTER COVE
BLDG. 104

S4.1

Sections

GENERAL NOTES:

1. THESE DOCUMENTS ARE INTENDED TO DESCRIBE THE WORK REQUIRED TO CONSTRUCT THE BUILDING SHELL AS DELINEATED, AS WELL AS PROVIDE TYPICAL DESIGNS FOR LEASE UNITS OF THE SIZES INDICATED. THESE TYPICAL DESIGNS ARE BASED ON THE OWNER'S STANDARD LEASE UNITS AND ARE NOT INTENDED TO BE SPECIFICALLY DESIGNED FOR INDIVIDUAL TENANTS. PRIOR TO CONSTRUCTION, THE GENERAL CONTRACTOR SHALL COORDINATE WITH THE OWNER'S REPRESENTATIVE THE SPECIFIC TENANT REQUIREMENTS FOR EACH SPACE TO INCLUDE: INTERIOR WALL LOCATIONS, TOILET REQUIREMENTS, MECHANICAL REQUIREMENTS, POWER & LIGHTING REQUIREMENTS, REAR DOOR LOCATIONS, STOREFRONT REQUIREMENTS, ETC.
2. FOR ALL RATED CONSTRUCTION AND RATED PENETRATIONS, SEE SHEET A1.2.
3. FOR ALL DOOR HARDWARE SCHEDULES, DOOR SCHEDULES AND WALL TYPES, REFER TO SHEET A1.2.
4. (EXPOSED PIPES AND SURFACES) HOT WATER AND DRAIN PIPES UNDER LAVATORIES SHALL BE INSULATED OR OTHERWISE CONFIGURED TO PROTECT AGAINST CONTACT. THERE SHALL NOT BE SHARP OR ABRASIVE SURFACES UNDER LAVATORIES
5. "F.E." DENOTES TYPE 2-A FIRE EXTINGUISHERS (3,000 S.F. PROTECTION AREA) EXCEPT AS NOTED OTHERWISE. ALL EXTINGUISHERS ARE TO BE SUPPLIED BY TENANT AT TIME OF UPFIT.
6. REFER TO CIVIL ENGINEERING DRAWINGS FOR HC ACCESSIBLE PARKING SPACES AND CURB CUT LOCATIONS.
7. REFER TO EXTERIOR ELEVATIONS FOR LOCATION OF ALL SAFETY GLAZING.
8. PROVIDE 1/2" FIBER EXPANSION JOINTS FULL WIDTH OF SIDEWALK AT COLUMN LINES.
9. MAXIMUM SLOPE OF SIDEWALKS TO BE 1:20, MAXIMUM CROSS-SLOPE IS 1:50.
10. ALL FIRE WALLS AND FIRE RATED PARTITIONS SHALL BE IDENTIFIED WITH SIGNAGE AS TO FIRE RATING AND PROTECTION OF OPENINGS. STENCIL IN CONCEALED SPACES THE FOLLOWING: "(__) HOUR FIRE AND SMOKE BARRIER - PROTECT ALL OPENINGS." IDENTIFICATION SHALL BE SPACED NO MORE THAT 12'-0' O.C. WITH A MINIMUM LETTER SIZE OF 2" IN HEIGHT ON A CONTRASTING BACKGROUND.

OCCUPANCY LOAD

BUILDING AREA - ALLOWABLE: SEE APPENDIX B

OCCUPANCY LOAD:

	AREA SUM	OCCUPANT SUM
UNIT 104-A - RESTAURANT	(PER TENANT'S SEATING LAYOUT)	59
UNIT 104-B - RETAIL	2,039/30	67
GROSS FLOOR AREA:	4,078 S.F.	126

EXIT WIDTH: REQUIRED: .26" PROVIDED: .252"
126 OCCUPANTS X .20 INCHES = 25.2"

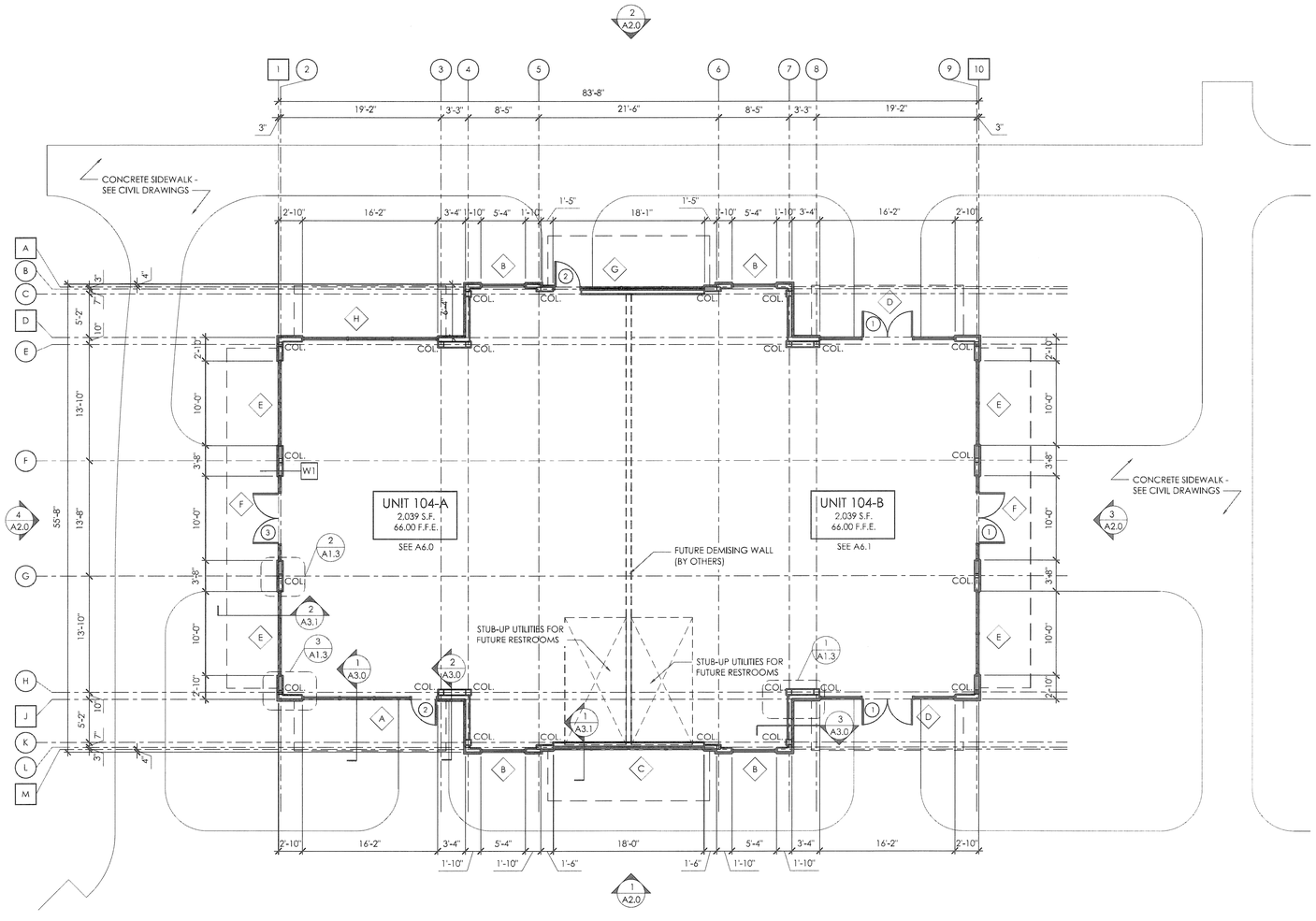

1 FLOOR PLAN
SCALE: 1/8" = 1'-0"

NARRAMORE ASSOCIATES, INC.
Architects & Planners
AMERICAN INSTITUTE OF ARCHITECTS
P.O. Box 8438 Greenville, SC 29604
310 Mills Ave. Greenville, SC 29605
Phone: 864.242.9881
Fax: 864.232.5202
plans@narramore-architects.com

©2014, NARRAMORE ASSOCIATES, INC.
COPYRIGHT PROTECTED BY FEDERAL LAW

SEAL

STATE OF SOUTH CAROLINA NARRAMORE ASSOCIATES, A.I.A. ARCHITECTS, INC. GREENVILLE, SC B84033 REGISTERED ARCHITECTS

STATE OF SOUTH CAROLINA DAVID L. NARRAMORE GREENVILLE, SC 1402 REGISTERED ARCHITECT

Blanchard & Calhoun COMMERCIAL
2743 PERIMETER PKWY
BLDG 100 STE 370
AUGUSTA, GA 30909

SHELTER COVE TOWNE CTR-BLDG. 104
32 SHELTER COVE LANE - UNITS 150 & 151
HWY. 278, MILE MARKER 8
HILTON HEAD ISLAND, SC 29928

REVISIONS

DOCUMENT DATA
Building 104
PROJECT NUMBER
13916
ISSUE DATE
03-26-14

SHELTER COVE
HILTON HEAD, SC

A1.0

FLOOR PLAN
BUILDING 104

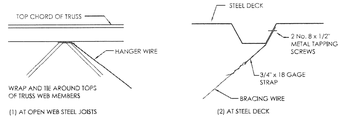

LOCATION OF BRACING WIRES

NTS

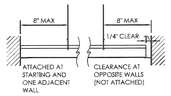

RUNNERS @ WALLS

NTS

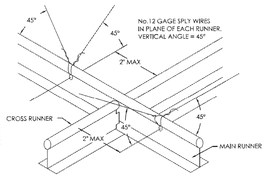

TYPICAL CEILING BRACING

NTS

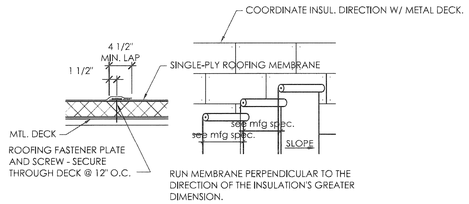

7 ROOFING LAYOUT PLAN

NTS

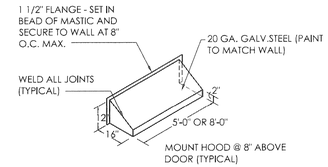

5 RAIN HOOD DETAIL

NTS

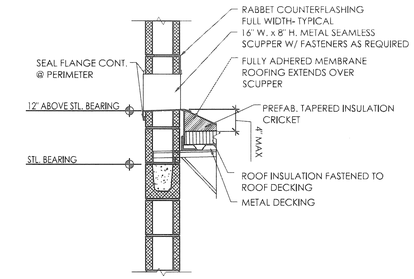

3 SECTION @ OVERFLOW SCUPPER

3/4"=1'-0"

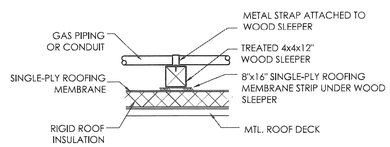

8 ROOF PIPING SLEEPER

NTS

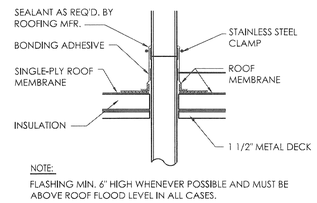

NOTE:
FLASHING MIN. 6" HIGH WHENEVER POSSIBLE AND MUST BE ABOVE ROOF FLOOD LEVEL IN ALL CASES.

6 VENT STACK FLASHING

NTS

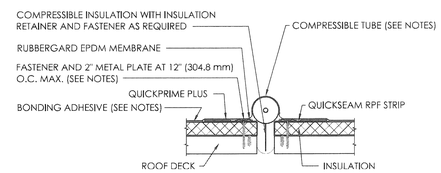

4 ROOFING EXPANSION JOINT DETAIL

NTS

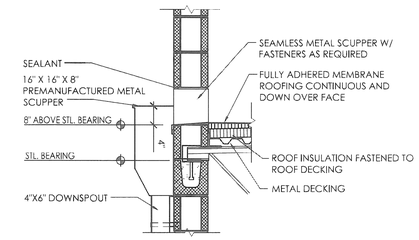

2 SECTION @ ROOF SCUPPER

3/4"=1'-0"

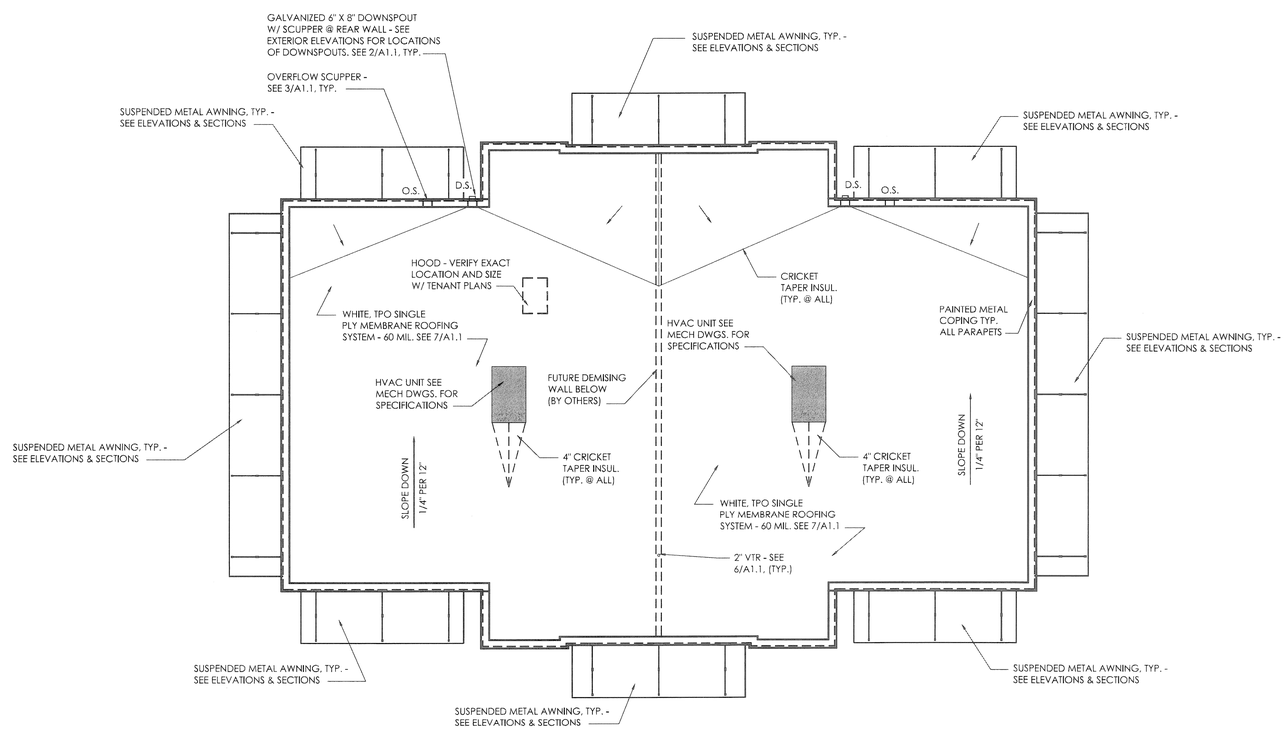

1 ROOF PLAN

SCALE: 1/8" = 1'-0"

NARRAMORE ASSOCIATES, INC.
Architects & Planners
AMERICAN INSTITUTE OF ARCHITECTS
P.O. Box 8438 Greenville, SC 29604
310 Mills Ave. Greenville, SC 29605
Phone: 864.242.9881
Fax: 864.232.5202
plans@narramore-architects.com

©2014, NARRAMORE ASSOCIATES, INC.
COPYRIGHT PROTECTED BY FEDERAL LAW

SEAL

STATE OF SOUTH CAROLINA
DAVID L. NARRAMORE
GREENVILLE, SC
1402
REGISTERED ARCHITECT

STATE OF SOUTH CAROLINA
NARRAMORE ASSOCIATES, A.I.A. ARCHITECTS, INC.
GREENVILLE, SC
B84033
REGISTERED ARCHITECTS

Blanchard & Calhoun COMMERCIAL
2743 PERIMETER PKWY
BLDG 100 STE 370
AUGUSTA, GA 30909

SHELTER COVE TOWNE CTR-BLDG. 104
32 SHELTER COVE LANE - UNITS 150 & 151
HWY. 278, MILE MARKER 8
HILTON HEAD ISLAND, SC 29928

REVISIONS

DOCUMENT DATA
Building 104
PROJECT NUMBER
13916
ISSUE DATE
03-26-14

SHELTER COVE
HILTON HEAD, SC

A1.1

ROOF PLAN
BUILDING 104

LANDLORD DOOR SCHEDULE

NO.	WIDTH	HEIGHT	THICKNESS	DOOR TYPE	DOOR MATERIAL	DOOR FINISH	FRAME TYPE	FRAME MATERIAL	FRAME FINISH	DETAILS HEAD	DETAILS JAMB	DETAILS SILL	HDW.	RATING	COMMENTS
1	6'-0"	7'-0"	1 3/4"	A	AL & GLASS	POWDER COAT	1	AL	POWDER COAT	BY ALUM. STOREFRONT VENDOR			1		
2	3'-0"	7'-0"	1 3/4"	B	AL & GLASS	POWDER COAT	1	AL	POWDER COAT	BY ALUM. STOREFRONT VENDOR			2		
3	6'-0"	7'-0"	1 3/4"	A	AL & GLASS	POWDER COAT	1	AL	POWDER COAT	BY ALUM. STOREFRONT VENDOR			2		

LANDLORD HARDWARE SCHEDULE

* MANUFACTURERS AND MODEL NUMBERS LISTED SET A STANDARD FOR QUALITY ONLY AND ARE NOT INTENDED TO PREVENT USE OF OTHER SIMILAR HARDWARE MANUFACTURER PRODUCTS.

SET	DESCRIPTION
1	HARDWARE BY DOOR MANUF. w/ CYL. LOCK (KEY OUTSIDE, TURN LATCH INSIDE) FINISH TO MATCH DOOR: OVERHEAD CLOSER: ALUMINUM THRESHOLD (CAULKED): FULLY WEATHER-STRIPPED w/ RUBBER SEAL @ BOTTOM
2	HARDWARE BY DOOR MANUF. w/ CYL. LOCK (KEY OUTSIDE, TURN LATCH INSIDE) FINISH TO MATCH DOOR: OVERHEAD CLOSER: ALUMINUM THRESHOLD (CAULKED): FULLY WEATHER-STRIPPED w/ RUBBER SEAL @ BOTTOM: PANIC HARDWARE/PUSH BAR

WALL TYPE LEGEND

W1 EXTERIOR METAL STUD WALL

6" 22 GA. METAL STUD @ 16" O.C.(MAX) WITH 5/8" FIRECODE "X" GYPSUM WALLBOARD TO ROOF DECK ON INTERIOR FACE. VAPOR BARRIER OVER 1/2" EXTERIOR GRADE SHEATHING CONT. @ EXTERIOR FACE W/ BOARD & BATTEN OR FIBER CEMENT SIDING.

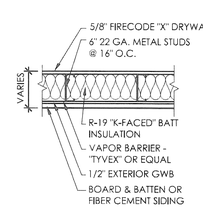

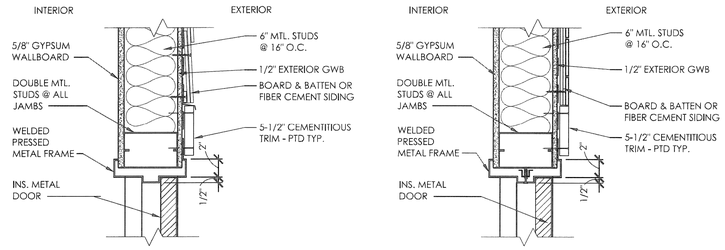

H-1 HEAD

J-1 JAMB

EXTERIOR METAL STUD WALL

2 DOOR DETAILS - HEAD AND JAMB

SCALE: 1/2" = 1'-0"

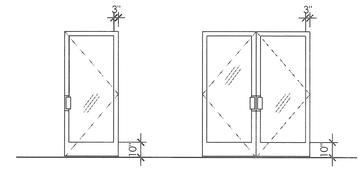

B STOREFRONT ALUMINUM

A STOREFRONT ALUMINUM

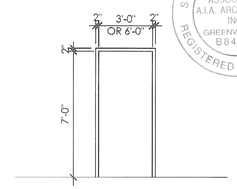

1 METAL EXTERIOR DOOR FRAME

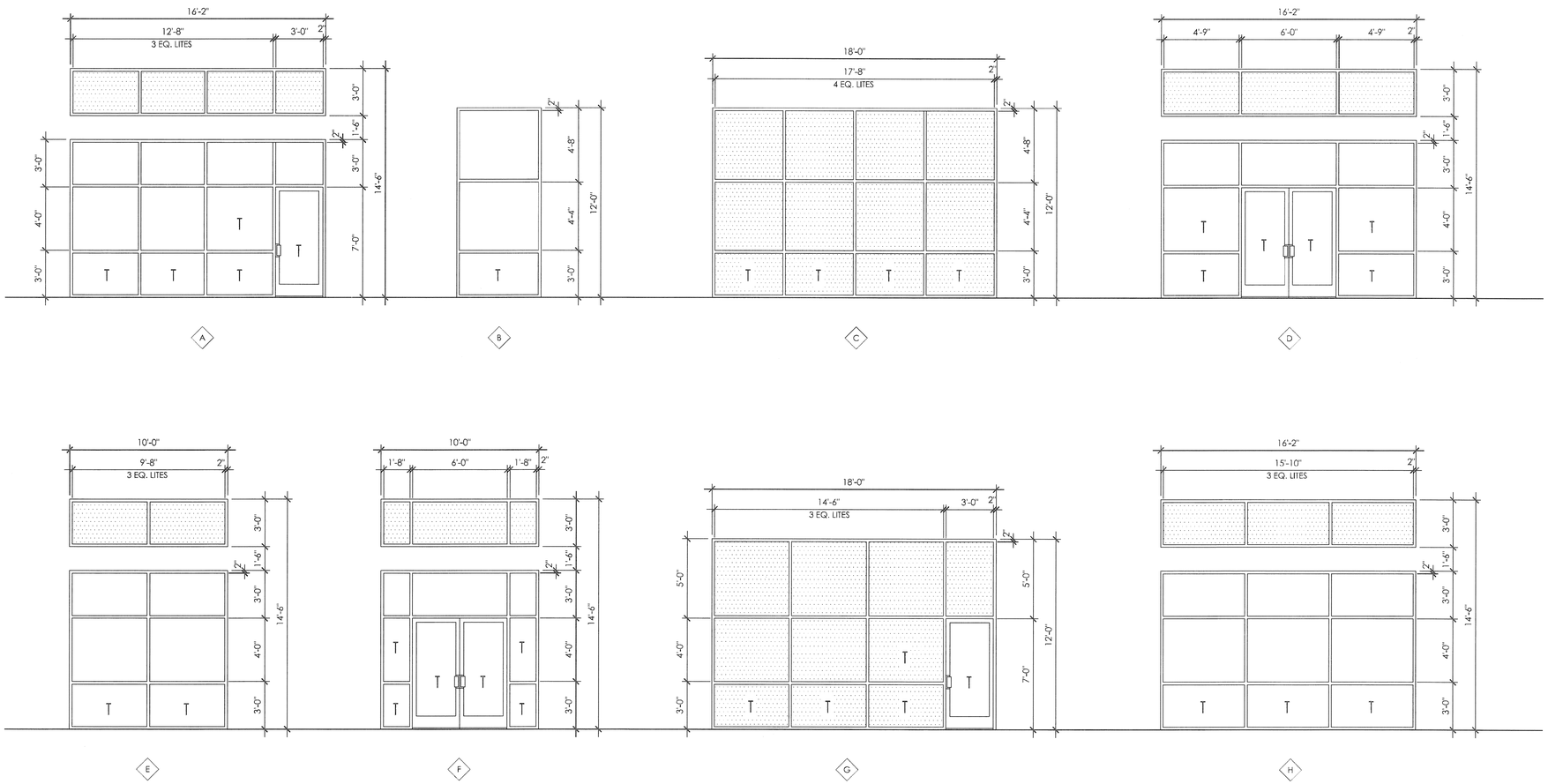

1 STOREFRONT DETAILS

SCALE: 1/4" = 1'-0"

NOTE:

1. ALL GLAZING IS 1" CLEAR, LOW "E".
2. ALL FRAMES EQUAL TO KAWNEER 450 SERIES STOREFRONT SYSTEM.
3. "T" DENOTES TEMPERED GLAZING WHERE REQUIRED BY CODE.
4. COLOR : CLEAR ANODIZED ALUMINUM.
5. DENOTES SPANDREL GLAZING

ALL STOREFRONT OPENINGS SHALL RECEIVE A CORRUGATED GALVANIZED STEEL STORM PANEL SYSTEM WITH PERMANENT EXTRUDED ALUMINUM TRACK SYSTEM BY EASTERN METAL SUPPLY OR EQUAL. HURRICANE PANEL SUBCONTRACTOR SHALL SUBMIT AN COMPLETE ENGINEERED DESIGN TO THE CITY FOR REVIEW AND APPROVAL. SEE SPECIFICATIONS. BASIS OF DESIGN IS STORM PANEL SYSTEM BY STORM SOLUTIONS OF THE LOWCOUNTRY- (843) 227-1027 OR EQUAL.

NARRAMORE ASSOCIATES, INC.
Architects & Planners
AMERICAN INSTITUTE OF ARCHITECTS
P.O. Box 8438 Greenville, SC 29604
310 Mills Ave. Greenville, SC 29605
Phone: 864.242.9881
Fax: 864.232.5202
plans@narramore-architects.com

©2014, NARRAMORE ASSOCIATES, INC.
COPYRIGHT PROTECTED BY FEDERAL LAW

SEAL

STATE OF SOUTH CAROLINA
NARRAMORE ASSOCIATES, A.I.A. ARCHITECTS, INC.
GREENVILLE, SC
B84033
REGISTERED ARCHITECT

STATE OF SOUTH CAROLINA
JOHN L. NARRAMORE
GREENVILLE, SC
1402
REGISTERED ARCHITECT

Blanchard & Calhoun COMMERCIAL

2743 PERIMETER PKWY
BLDG 100 STE 370
AUGUSTA, GA 30909

SHELTER COVE TOWNE CTR.-BLDG. 104

32 SHELTER COVE LANE - UNITS 150 & 151
HWY. 278, MILE MARKER 8
HILTON HEAD ISLAND, SC 29928

REVISIONS

DOCUMENT DATA
Building 104
PROJECT NUMBER
13916
ISSUE DATE
03-26-14

SHELTER COVE
HILTON HEAD, SC

A1.2

SCHEDULES
BUILDING 104

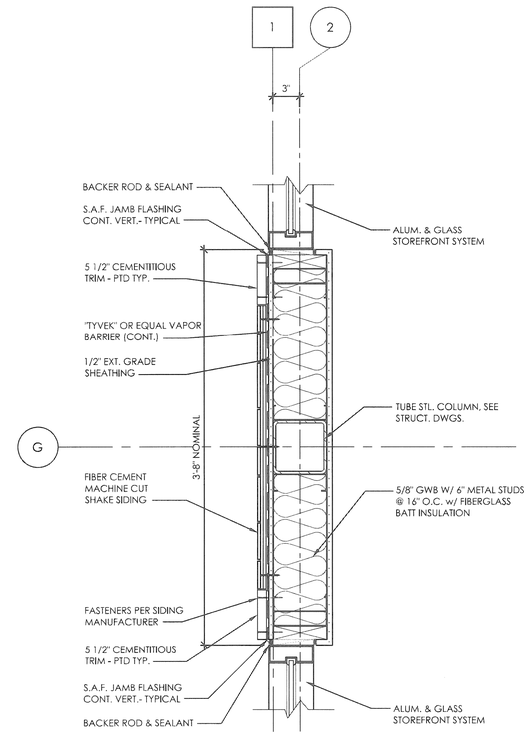

3 PLAN DETAIL
SCALE: 1 1/2"=1'-0"

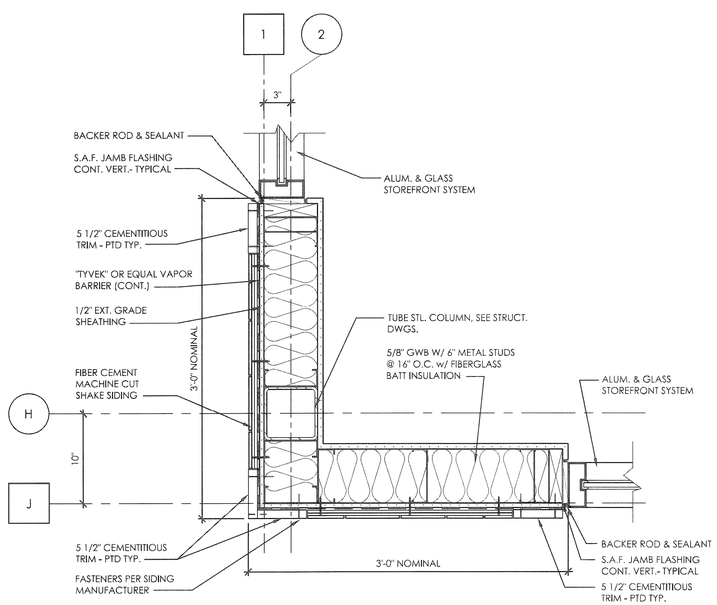

3 PLAN DETAIL
SCALE: 1 1/2"=1'-0"

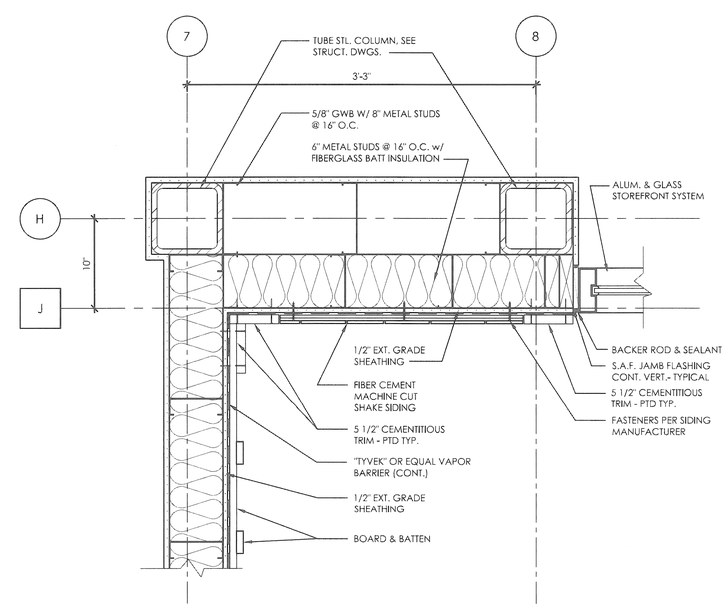

1 PLAN DETAIL
SCALE: 1 1/2"=1'-0"

NARRAMORE ASSOCIATES, INC.
Architects & Planners
AMERICAN INSTITUTE OF ARCHITECTS

P.O. Box 8438 Greenville, SC 29604
310 Mills Ave. Greenville, SC 29605

Phone: 864.242.9881
Fax: 864.232.5202

plans@narramore-architects.com

©2014, NARRAMORE ASSOCIATES, INC.
COPYRIGHT PROTECTED BY FEDERAL LAW

SEAL

STATE OF SOUTH CAROLINA
NARRAMORE ASSOCIATES, A.I.A. ARCHITECTS, INC.
GREENVILLE, SC
B84033
REGISTERED ARCHITECTS

STATE OF SOUTH CAROLINA
DAVID L. NARRAMORE
GREENVILLE, SC
1402
REGISTERED ARCHITECT
3/28/14

Blanchard & Calhoun COMMERCIAL

2743 PERIMETER PKWY
BLDG 100 STE 370
AUGUSTA, GA 30909

SHELTER COVE TOWNE CTR-BLDG. 104

32 SHELTER COVE LANE - UNITS 150 & 151
HWY. 278, MILE MARKER 8
HILTON HEAD ISLAND, SC 29928

REVISIONS

DOCUMENT DATA
Building 104
PROJECT NUMBER
13916
ISSUE DATE
03-26-14

SHELTER COVE
HILTON HEAD, SC

A1.3

DETAILS
BUILDING 104

EXTERIOR FINISH SCHEDULE

STOREFRONT SYSTEM:
ALL GLASS SHALL BE 1" LOW-E
INSULATED GLASS W/ CLEAR
ANODIZED ALUMINUM FRAMES

BOARD & BATTEN
SW #6071 "POPULAR GRAY"

SIDING
FIBER CEMENT MACHINE CUT SHAKE
SW #7534 "OUTERBANKS"

TRIM
SW #6071 "POPULAR GREY"
SW #7534 "OUTERBANKS"

CORNICE
SW #7042 "SHOJI WHITE"

METAL ROOFING AND COPING:
ALL COPING TO BE PAINTED SW #7042 "SHOJI WHITE"

SUSPENDED METAL AWNINGS -
CLEAR ANODIZED ALUMINUM

NOTES:
ALL ELECTRICAL EQUIPMENT, DOORS, AND DOWNSPOUTS ARE TO BE PAINTED TO MATCH ADJACENT WALLS.

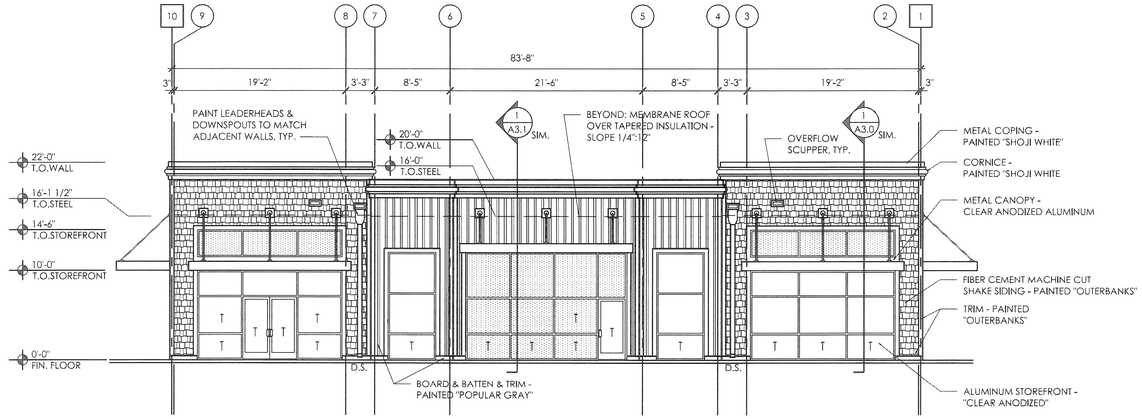

2 EAST ELEVATION
SCALE: 1/8" = 1'-0"

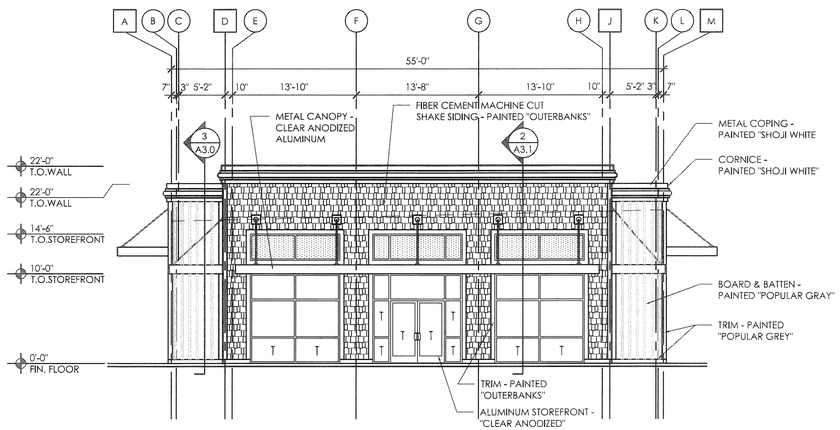

4 NORTH ELEVATION
SCALE: 1/8" = 1'-0"

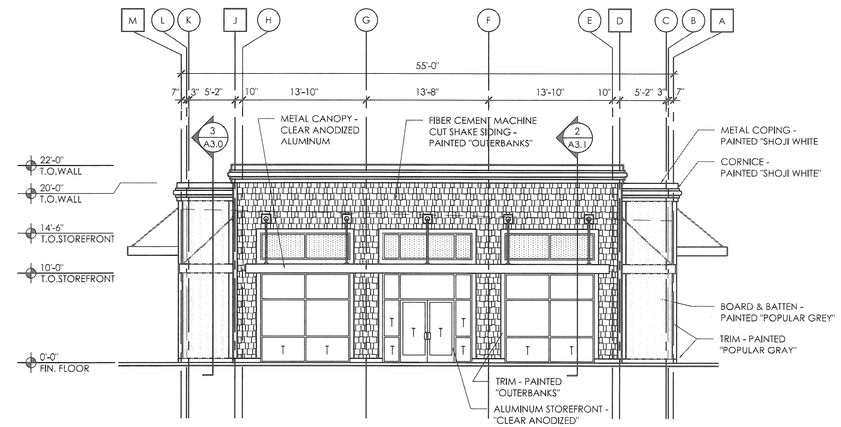

3 SOUTH ELEVATION
SCALE: 1/8" = 1'-0"

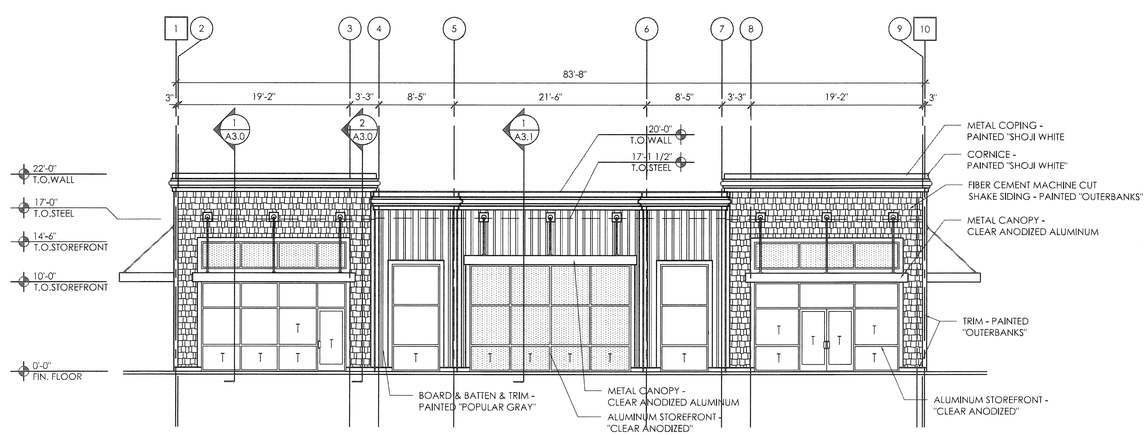

1 WEST ELEVATION
SCALE: 1/8" = 1'-0"

NARRAMORE ASSOCIATES, INC.
Architects & Planners
AMERICAN INSTITUTE OF ARCHITECTS

P.O. Box 8438 Greenville, SC 29604
310 Mills Ave. Greenville, SC 29605

Phone: 864.242.9881
Fax: 864.232.5202
plane@narramore-architects.com

©2014, NARRAMORE ASSOCIATES, INC.
COPYRIGHT PROTECTED BY FEDERAL LAW

SEAL

STATE OF SOUTH CAROLINA
NARRAMORE ASSOCIATES, A.I.A. ARCHITECTS, INC.
GREENVILLE, SC
884033
REGISTERED ARCHITECT

STATE OF SOUTH CAROLINA
CHARLES E. NARRAMORE
GREENVILLE, SC
1402
REGISTERED ARCHITECT
3/28/14

Blanchard & Calhoun COMMERCIAL
2743 PERIMETER PKWY
BLDG 100 STE 370
AUGUSTA, GA 30909

SHELTER COVE TOWNE CTR-BLDG. 104
32 SHELTER COVE LANE - UNITS 150 & 151
HWY. 278, MILE MARKER 8
HILTON HEAD ISLAND, SC 29928

REVISIONS

DOCUMENT DATA
Building 104
PROJECT NUMBER
13916
ISSUE DATE
03-26-14

SHELTER COVE
HILTON HEAD, SC

A2.0

EXTERIOR ELEVATIONS
BUILDING 104

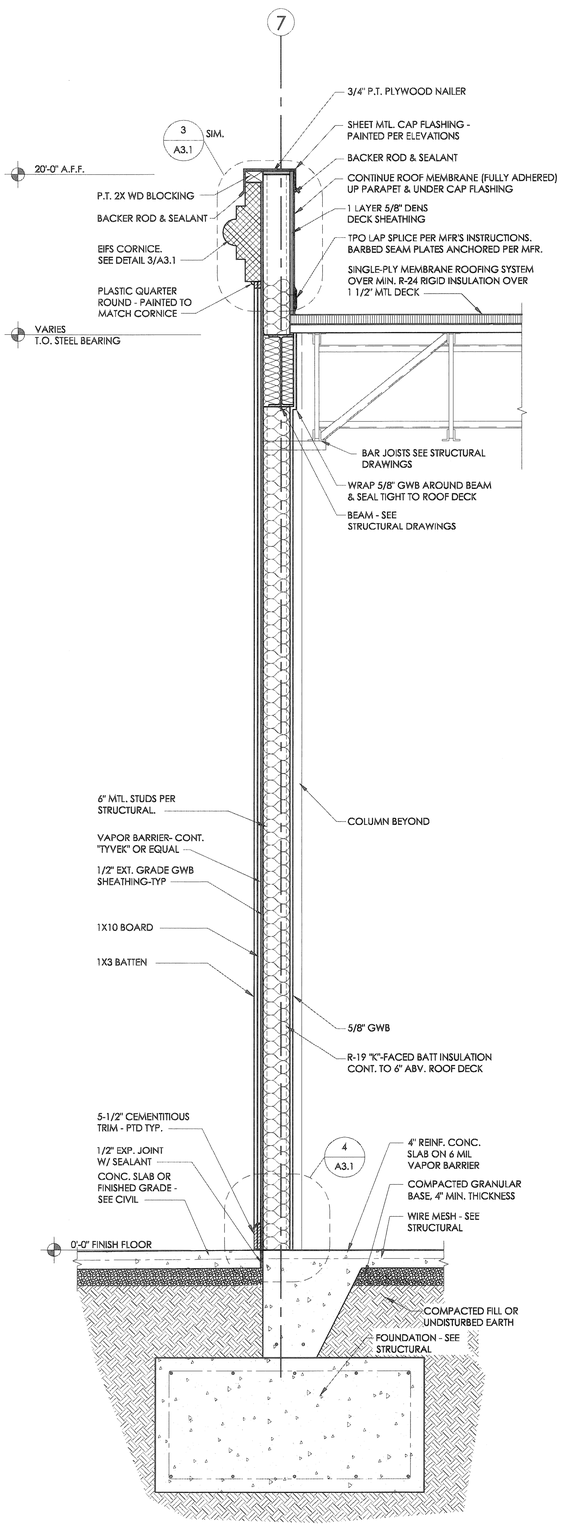

3 WALL SECTION
SCALE: 3/4" = 1'-0"

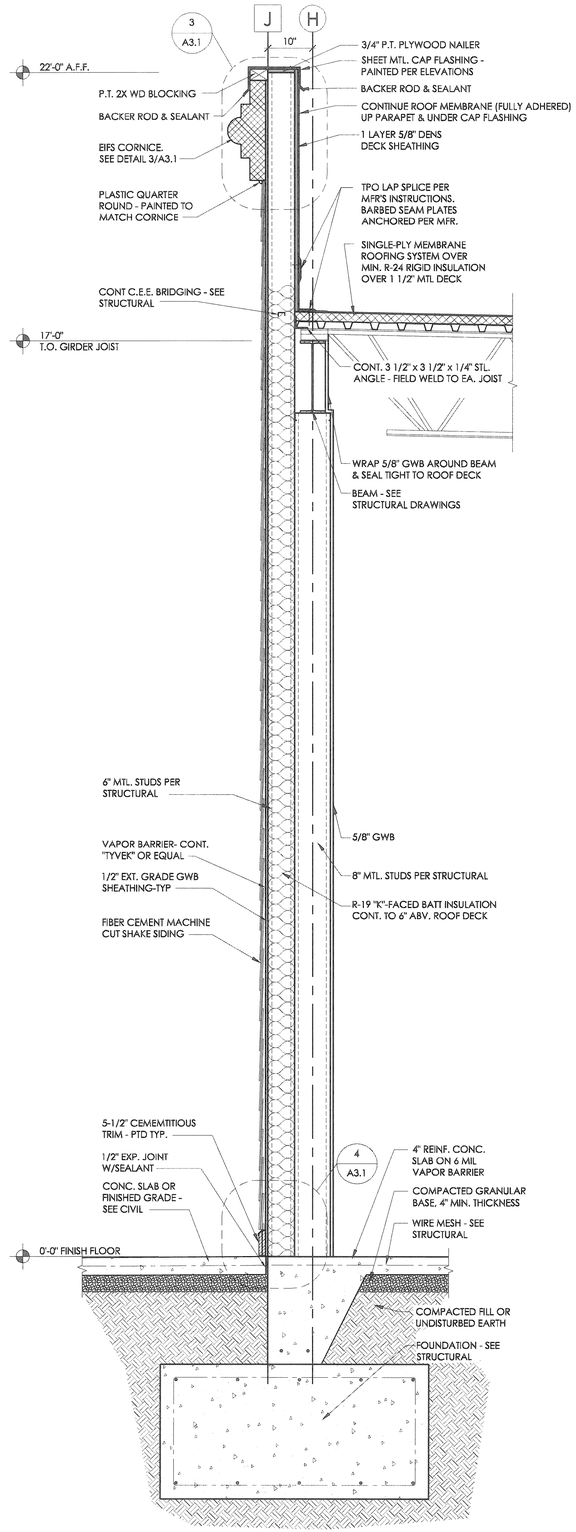

2 WALL SECTION
SCALE: 3/4" = 1'-0"

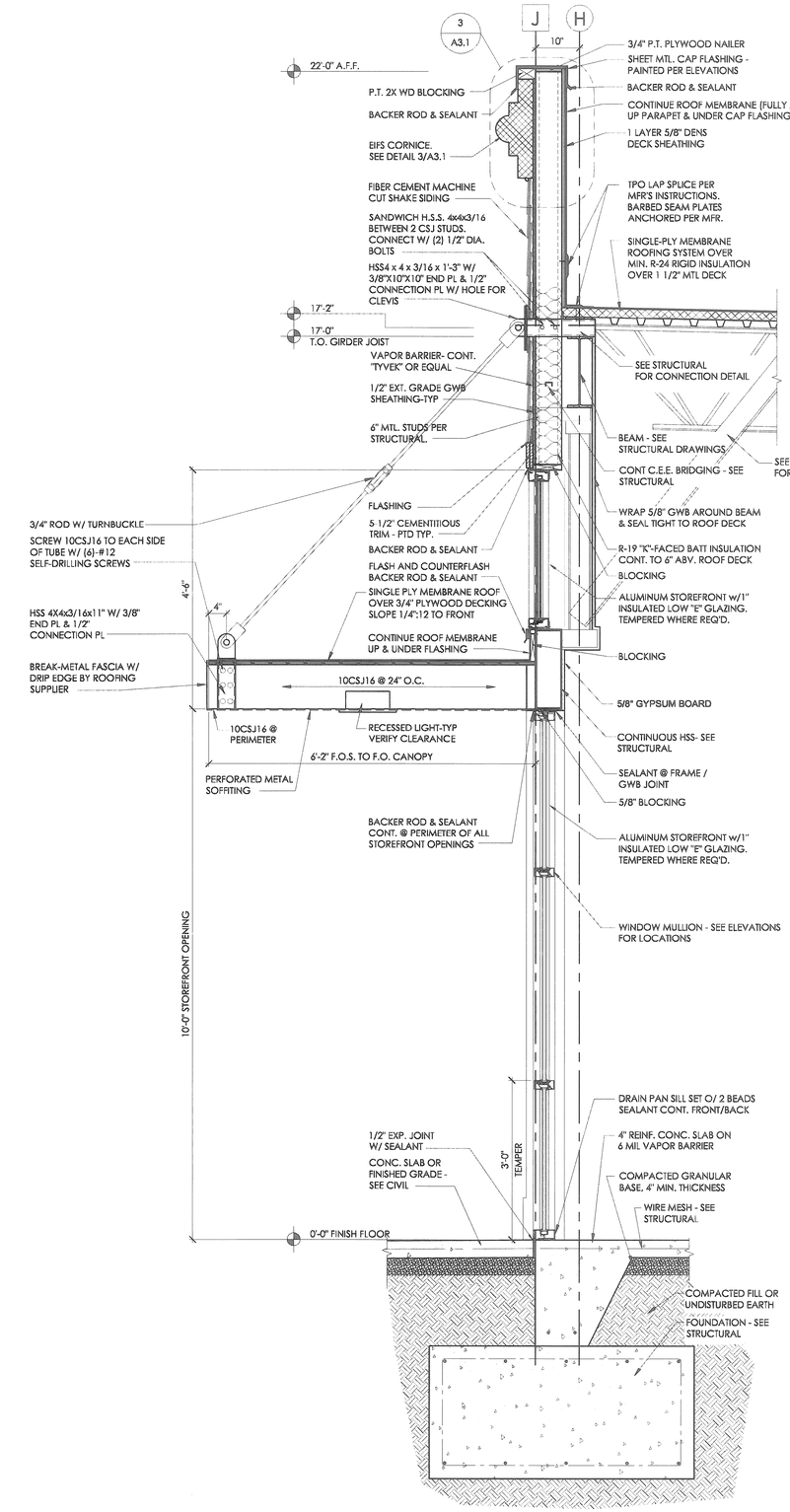

1 WALL SECTION
SCALE: 3/4" = 1'-0"

NARRAMORE ASSOCIATES, INC.
Architects & Planners
AMERICAN INSTITUTE OF ARCHITECTS
P.O. Box 8438 Greenville, SC 29604
310 Millis Ave. Greenville, SC 29605
Phone: 864.242.9881
Fax: 864.232.5202
plans@narramore-architects.com
©2014, NARRAMORE ASSOCIATES, INC.
COPYRIGHT PROTECTED BY FEDERAL LAW

STATE OF SOUTH CAROLINA
NARRAMORE ASSOCIATES, A.I.A. ARCHITECTS, INC.
GREENVILLE, SC
B84033
REGISTERED ARCHITECT

SEAL
STATE OF SOUTH CAROLINA
NARRAMORE
GREENVILLE, SC
1402
REGISTERED ARCHITECT
3/26/14

Blanchard & Calhoun COMMERCIAL
2743 PERIMETER PKWY
BLDG 100 STE 370
AUGUSTA, GA 30909

SHELTER COVE TOWNE CTR-BLDG. 104
32 SHELTER COVE LANE - UNITS 150 & 151
HWY. 278, MILE MARKER 8
HILTON HEAD ISLAND, SC 29928

REVISIONS

DOCUMENT DATA
Building 104
PROJECT NUMBER
13916
ISSUE DATE
03-26-14

SHELTER COVE
HILTON HEAD, SC

A3.0

WALL SECTIONS
BUILDING 104

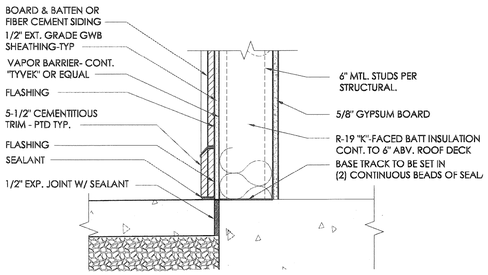

4 DETAIL
SCALE: 1 1/2" = 1'-0"

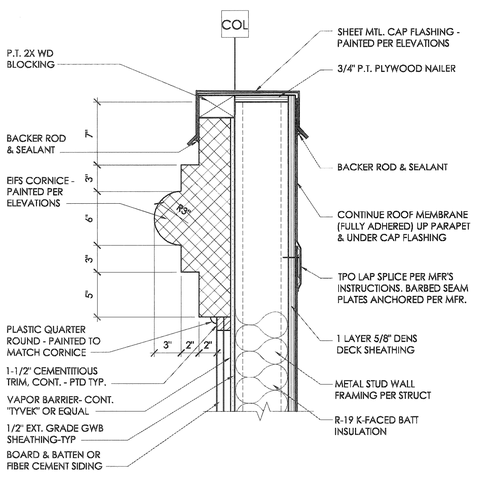

3 DETAIL
SCALE: 1 1/2" = 1'-0"

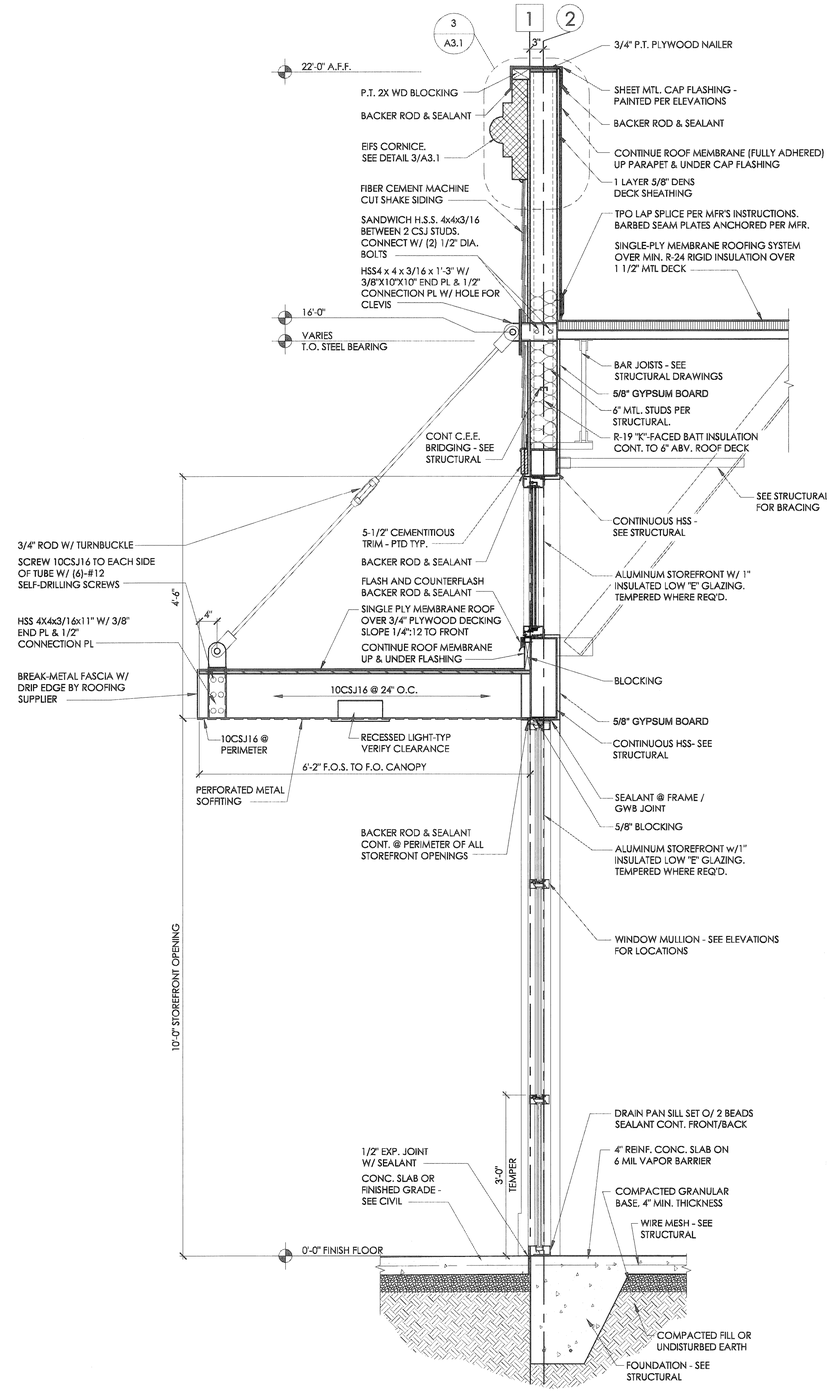

2 WALL SECTION
SCALE: 3/4" = 1'-0"

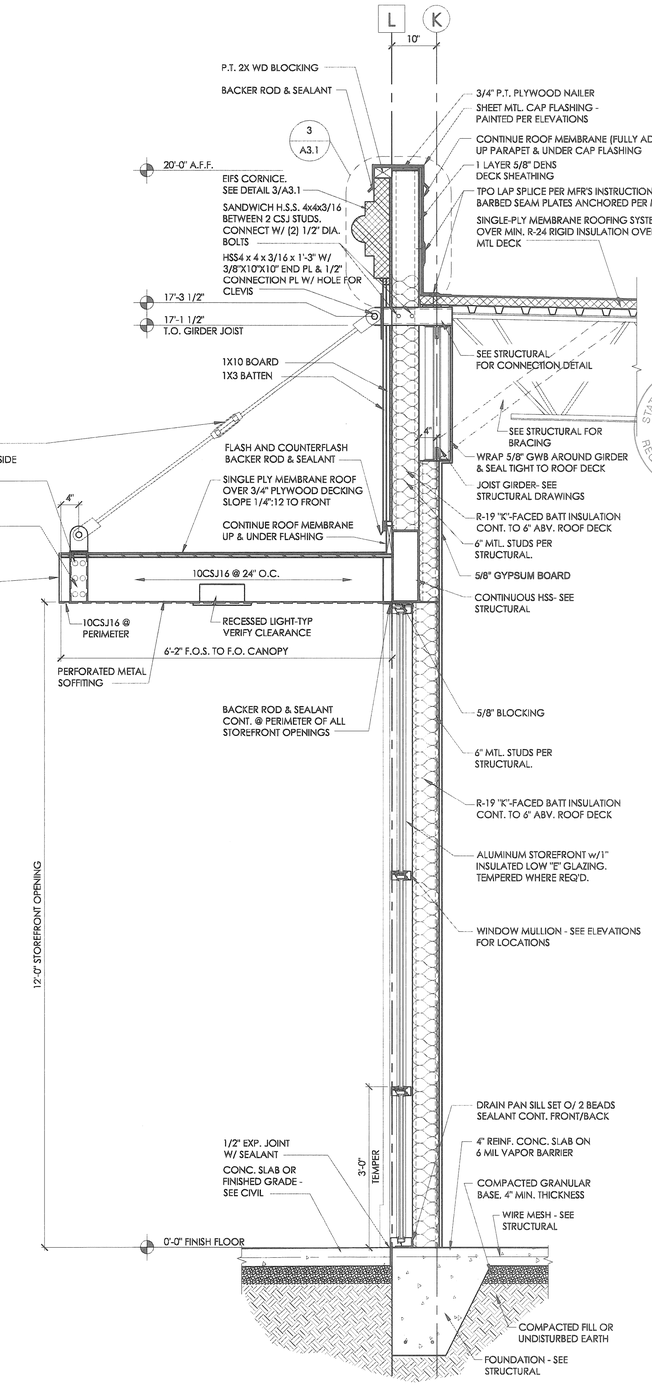

1 WALL SECTION
SCALE: 3/4" = 1'-0"

NARRAMORE ASSOCIATES, INC.
Architects & Planners
AMERICAN INSTITUTE OF ARCHITECTS
P.O. Box 8438 Greenville, SC 29604
310 Mills Ave. Greenville, SC 29605
Phone: 864.242.9881
Fax: 864.232.5202
plans@narramore-architects.com
©2014, NARRAMORE ASSOCIATES, INC.
COPYRIGHT PROTECTED BY FEDERAL LAW

SEAL
STATE OF SOUTH CAROLINA
NARRAMORE
GREENVILLE, SC
1402
REGISTERED ARCHITECT
3/26/14

STATE OF SOUTH CAROLINA
NARRAMORE ASSOCIATES, A.I.A. ARCHITECTS, INC.
GREENVILLE, SC
B84033
REGISTERED ARCHITECTS

Blanchard & Calhoun COMMERCIAL
2743 PERIMETER PKWY
BLDG 100 STE 370
AUGUSTA, GA 30909

SHELTER COVE TOWNE CTR.-BLDG. 104
32 SHELTER COVE LANE - UNITS 150 & 151
HWY. 278, MILE MARKER 8
HILTON HEAD ISLAND, SC 29928

REVISIONS

DOCUMENT DATA
Building 104
PROJECT NUMBER
13916
ISSUE DATE
03-26-14

SHELTER COVE
HILTON HEAD, SC

A3.1

WALL SECTIONS
BUILDING 104

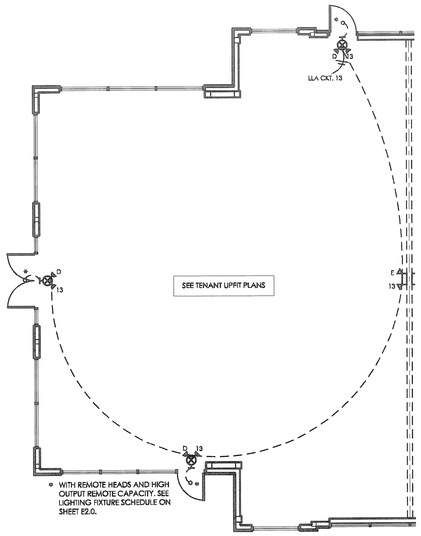

4 LIGHTING PLAN
SCALE: 1/8" = 1'-0"

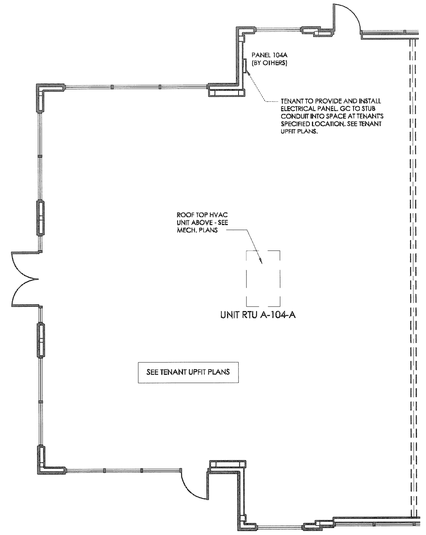

3 POWER PLAN
SCALE: 1/8" = 1'-0"

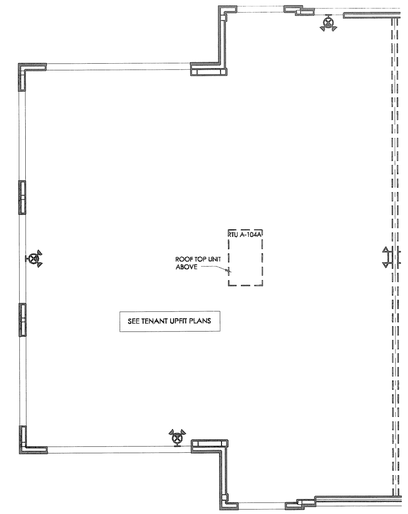

2 REFLECTED CEILING PLAN
SCALE: 1/8" = 1'-0"

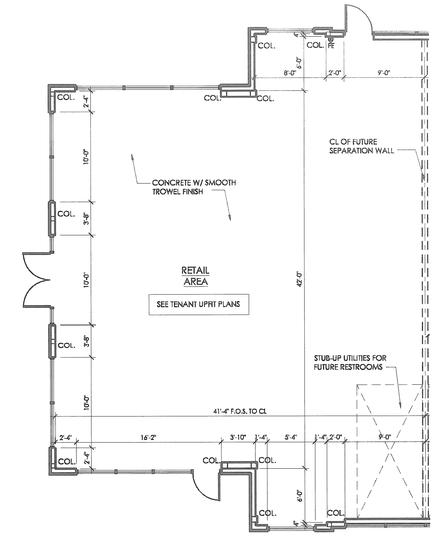

1 FLOOR PLAN (2,039 SQ. FT.)
SCALE: 1/8" = 1'-0"

STATE OF SOUTH CAROLINA
NARRAMORE ASSOCIATES, A.I.A. ARCHITECTS, INC.
GREENVILLE, SC
R84033
REGISTERED ARCHITECTS

GENERAL ELECTRICAL NOTES:

1. SEE OVERALL ELECTRICAL DRAWINGS E1 THROUGH E2 FOR ELECTRICAL LEGEND, DETAILS, & SCHEDULES.
2. ALL ELECTRICAL WORK INCLUDING CONDUIT, WIRE, LIGHTING, PANEL BOARDS, ETC. SHALL BE BY A LICENSED REPRESENTATIVE OF THE ELECTRICAL CONTRACTOR & INSPECTED PRIOR TO COVERING.
3. THE METAL GAS PIPING SYSTEM SHALL BE ELECTRICALLY CONTINUOUS AND BONDED TO THE GROUNDING ELECTRODE.
4. ALL BRANCH CIRCUITS, FEEDERS, AND DISCONNECTS SHALL BE LEGIBLY LABELED TO INDICATE ITS PURPOSE. THE MARKING SHALL BE OF SUFFICIENT DURABILITY TO WITHSTANDING THE ENVIRONMENT INVOLVED.
5. CONTRACTOR SHALL VERIFY SERVICE AND ORDER PANELS AS TOP OR BOTTOM FED DEPENDING ON THE ACTUAL ROUTING OF FEEDER AS DETERMINED IN FIELD.
6. 25,000 AIC IS APPROXIMATE ONLY. CONTRACTOR TO OBTAIN SHORT-CIRCUIT INFORMATION FROM LOCAL POWER UTILITY TO DETERMINE EXACT RATING REQUIRED.
7. LISTED OR LABELED EQUIPMENT SHALL BE USED AND INSTALLED IN ACCORDANCE WITH ANY INSTRUCTIONS INCLUDED IN THE LISTING OR LABELING.
8. PROVIDE 1" CONDUIT, JUNCTION BOX, AND COVER PLATE FOR ALARM/STROBE MTD. +86"A.F.F.

SYMBOL LEGEND

	WALL MOUNTED HPS LIGHT FIXTURE (EXTERIOR)
	WALL MOUNTED EXIT LIGHT / EMERGENCY LIGHT

GENERAL NOTES:

1. FOR ALL UNIT PLAN DIMENSIONS REFER TO SHEET A1.0.
2. SEE DRAWING A1.2 FOR DOOR AND HARDWARE SCHEDULE.

2039 S.F. UNIT 104-A

ROOM FINISH SCHEDULE

SPACE	FLOOR	BASE	WALLS	CEILING	
				MATERIAL	HEIGHT
SALES AREA	CONC. SLAB	NONE	GYP. BD. UNPAINTED **	NONE	

* VERIFY WITH TENANT REQUIREMENTS

** CMU WALL IN THE BACK ROOM @ SALES/STOCKROOM AREA IS TO BE PAINTED WITH AN OFF-WHITE WASHABLE ENAMEL PAINT

*** EXPOSED REAR MASONRY WALL OF RESTROOMS, SALES AREA, AND/OR STOCKROOMS ARE TO BE FURRED OUT WITH 1 5/8" METAL

NARRAMORE ASSOCIATES, INC.
Architects & Planners
AMERICAN INSTITUTE OF ARCHITECTS
P.O. Box 8438 Greenville, SC 29604
310 Mills Ave. Greenville, SC 29605
Phone: 864.242.9881
Fax: 864.232.5202
plans@narramore-architects.com

©2014, NARRAMORE ASSOCIATES, INC.
COPYRIGHT PROTECTED BY FEDERAL LAW

SEAL
STATE OF SOUTH CAROLINA
NARRAMORE
GREENVILLE, SC
1402
REGISTERED ARCHITECT
3/28/14

Blanchard & Calhoun COMMERCIAL
2743 PERIMETER PKWY
BLDG 100 STE 370
AUGUSTA, GA 30909

SHELTER COVE TOWNE CTR-BLDG. 104
32 SHELTER COVE LANE - UNITS 150 & 151
HWY. 278, MILE MARKER 8
HILTON HEAD ISLAND, SC 29928

REVISIONS

DOCUMENT DATA
Building 104
PROJECT NUMBER
13916
ISSUE DATE
03-26-14

SHELTER COVE
HILTON HEAD, SC

A6.0

UNIT PLAN - 2039 S.F.
BUILDING 104

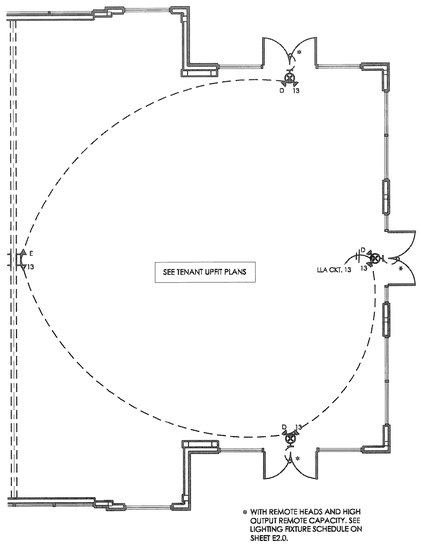

4 LIGHTING PLAN
SCALE: 1/8" = 1'-0"

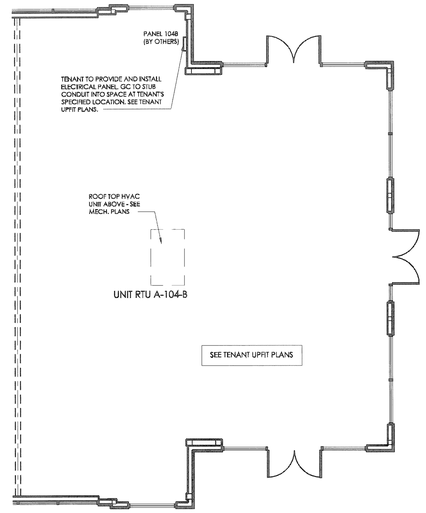

3 POWER PLAN
SCALE: 1/8" = 1'-0"

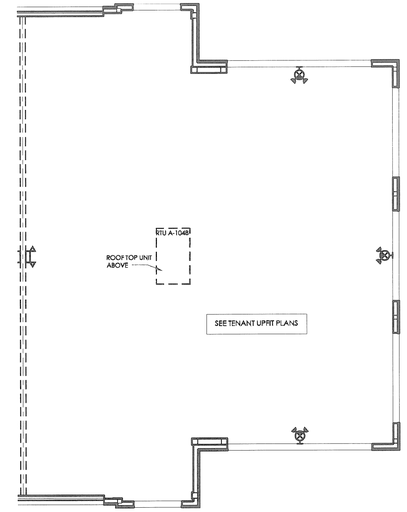

2 REFLECTED CEILING PLAN
SCALE: 1/8" = 1'-0"

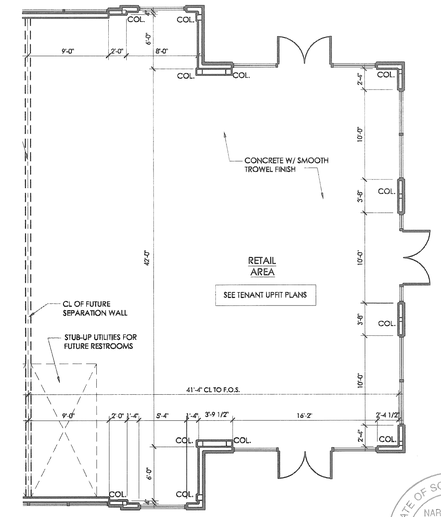

1 FLOOR PLAN (2,039 SQ. FT.)
SCALE: 1/8" = 1'-0"

GENERAL ELECTRICAL NOTES:

1. SEE OVERALL ELECTRICAL DRAWINGS E1 THROUGH E2 FOR ELECTRICAL LEGEND, DETAILS, & SCHEDULES.
2. ALL ELECTRICAL WORK INCLUDING CONDUIT, WIRE, LIGHTING, PANEL BOARDS, ETC. SHALL BE BY A LICENSED REPRESENTATIVE OF THE ELECTRICAL CONTRACTOR & INSPECTED PRIOR TO COVERING.
3. THE METAL GAS PIPING SYSTEM SHALL BE ELECTRICALLY CONTINUOUS AND BONDED TO THE GROUNDING ELECTRODE.
4. ALL BRANCH CIRCUITS, FEEDERS, AND DISCONNECTS SHALL BE LEGIBLY LABELED TO INDICATE ITS PURPOSE. THE MARKING SHALL BE OF SUFFICIENT DURABILITY TO WITHSTANDING THE ENVIRONMENT INVOLVED.
5. CONTRACTOR SHALL VERIFY SERVICE AND ORDER PANELS AS TOP OR BOTTOM FED DEPENDING ON THE ACTUAL ROUTING OF FEEDER AS DETERMINED IN FIELD.
6. 25,000 AIC IS APPROXIMATE ONLY. CONTRACTOR TO OBTAIN SHORT-CIRCUIT INFORMATION FROM LOCAL POWER UTILITY TO DETERMINE EXACT RATING REQUIRED.
7. LISTED OR LABELED EQUIPMENT SHALL BE USED AND INSTALLED IN ACCORDANCE WITH ANY INSTRUCTIONS INCLUDED IN THE LISTING OR LABELING.
8. PROVIDE 1" CONDUIT, JUNCTION BOX, AND COVER PLATE FOR ALARM/STROBE MTD. +86"A.F.F.

SYMBOL LEGEND

	WALL MOUNTED HPS LIGHT FIXTURE (EXTERIOR)
	WALL MOUNTED EXIT LIGHT / EMERGENCY LIGHT

GENERAL NOTES:

1. FOR ALL UNIT PLAN DIMENSIONS REFER TO SHEET A1.0.
2. SEE DRAWING A1.2 FOR DOOR AND HARDWARE SCHEDULE.

2039 S.F. UNIT 104-B

ROOM FINISH SCHEDULE

SPACE	FLOOR	BASE	WALLS	CEILING	
				MATERIAL	HEIGHT
SALES AREA	CONC. SLAB	NONE	GYP. BD. UNPAINTED **	NONE	

* VERIFY WITH TENANT REQUIREMENTS

** CMU WALL IN THE BACK ROOM @ SALES/STOCKROOM AREA IS TO BE PAINTED WITH AN OFF-WHITE WASHABLE ENAMEL PAINT

*** EXPOSED REAR MASONRY WALL OF RESTROOMS, SALES AREA, AND/OR STOCKROOMS ARE TO BE FURRED OUT WITH 1 5/8" METAL

NARRAMORE ASSOCIATES, INC.
Architects & Planners
AMERICAN INSTITUTE OF ARCHITECTS
P.O. Box 8438 Greenville, SC 29604
310 Mills Ave. Greenville, SC 29605
Phone: 864.242.9881
Fax: 864.232.5202
plans@narramore-architects.com
©2014, NARRAMORE ASSOCIATES, INC.
COPYRIGHT PROTECTED BY FEDERAL LAW

SEAL
STATE OF SOUTH CAROLINA
JOHN L. NARRAMORE
GREENVILLE, SC
1402
REGISTERED ARCHITECT
3/26/14

STATE OF SOUTH CAROLINA
NARRAMORE ASSOCIATES, A.I.A. ARCHITECTS, INC.
GREENVILLE, SC
B84033
REGISTERED ARCHITECTS

Blanchard & Calhoun COMMERCIAL
2743 PERIMETER PKWY
BLDG 100 STE 370
AUGUSTA, GA 30909

SHELTER COVE TOWNE CTR-BLDG. 104
32 SHELTER COVE LANE - UNITS 150 & 151
HWY. 278, MILE MARKER 8
HILTON HEAD ISLAND, SC 29928

REVISIONS

DOCUMENT DATA
Building 104
PROJECT NUMBER
13916
ISSUE DATE
03-26-14

SHELTER COVE
HILTON HEAD, SC

A6.1

UNIT PLAN - 2039 S.F.
BUILDING 104

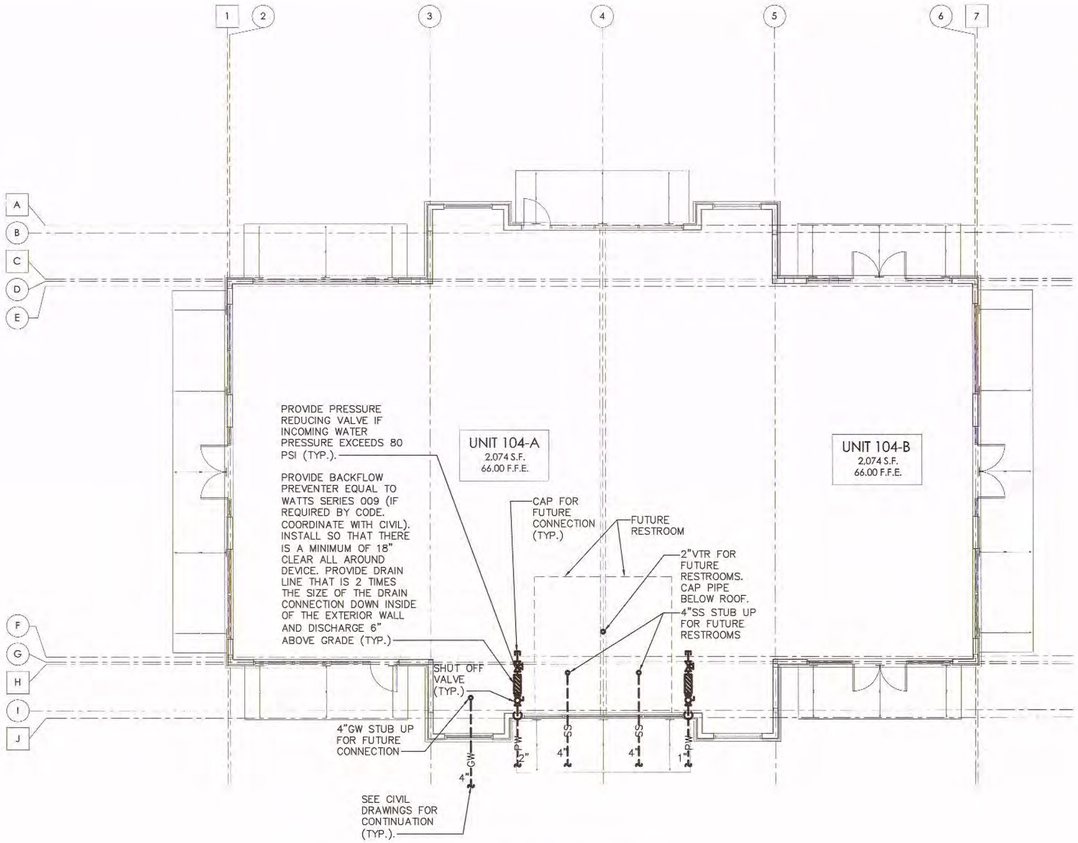

PLUMBING PLAN

SCALE : 1/8" = 1'-0"

PLUMBING LEGEND

PW	POTABLE WATER
PW	POTABLE WATER BURIED
HW	POTABLE HOT WATER
THW	TEMPERED HOT WATER
SS	SANITARY SEWER
SS	SANITARY SEWER BURIED
	VENT
GW	GREASE WASTE BURIED
V	VENT
VTR	VENT-THRU-ROOF
	CHECK VALVE
	UNION
	SHUT-OFF VALVE
	GAS SHUT-OFF VALVE
CO	FLOOR CLEANOUT
WCO	WALL CLEANOUT

PLUMBING SPECIFICATIONS:

GENERAL: CONTRACTOR SHALL PROVIDE ALL LABOR, MATERIALS, TOOLS, EQUIPMENT AND MANAGEMENT NECESSARY OR REASONABLY INCIDENTAL TO COMPLETE THE WORK SHOWN ON THE DRAWINGS AND/OR DESCRIBED IN THE SPECIFICATIONS.

CODES AND ORDINANCES: ALL WORK PERFORMED UNDER THIS CONTRACT SHALL BE IN STRICT ACCORDANCE WITH REQUIREMENTS OF THE OWNER'S INSURANCE CARRIER, NFPA CODES, STATE AND LOCAL LAWS AND CODES, AND ALL LAWS, RULES AND REGULATIONS OF PUBLIC BODIES HAVING JURISDICTION.

INTERFERENCES: CONTRACTOR SHALL VISIT THE SITE AND INSPECT THE AREA WHERE THE WORK IS TO BE PERFORMED. CONTRACTOR SHALL BE RESPONSIBLE FOR ACCOMMODATING ALL INTERFERENCES WITH THE WORK, OFFSETTING, MODIFYING, AND OTHERWISE FITTING THE NEW EQUIPMENT TO THE SPACE AVAILABLE.

GUARANTEE: ALL MATERIALS AND WORKMANSHIP PROVIDED SHALL BE WARRANTED AGAINST DEFECTS FOR A PERIOD OF ONE YEAR FROM THE DATE OF FINAL ACCEPTANCE OF THE WORK.

CLEAN-UP: ALL DEBRIS, RUBBISH, SCRAPS, ETC. SHALL BE CLEANED UP AT THE END OF EACH WORK DAY. AT THE COMPLETION OF THE WORK, ALL NEW CONSTRUCTION WORK AND MATERIALS SHALL BE CLEANED UP OF MARKINGS, DIRT, ETC. AND LEFT IN A CLEAN AND SIGHTLY CONDITION, READY FOR USE BY THE OWNER.

PIPING MATERIALS:

POTABLE WATER: POTABLE WATER PIPE SHALL BE ASTM B-88 HARD DRAWN COPPER, TYPE L OR K. FITTINGS SHALL BE ANSI B-16.22, WROUGHT COPPER, SOLDER JOINT. JOINTS SHALL BE MADE USING NON-CORROSIVE FLUX AND SOLDER COMPOUND MEETING NSF REQUIREMENTS FOR USE ON POTABLE WATER PIPING. PIPE ENDS SHALL BE CUT SQUARE AND CLEANED TO A BRIGHT METAL FINISH BEFORE SOLDERING.

SANITARY SEWER WASTE AND VENT ABOVE GROUND: SANITARY SEWER PIPE AND FITTINGS SHALL BE EITHER CAST IRON, ASTM A-74, SERVICE WEIGHT, HUB AND SPIGOT PATTERN WITH ASTM C-564 RESILIENT GASKETS; OR HUBLESS CAST-IRON PIPE AND FITTINGS, ASTM A 888, CISPI-301, WITH STANDARD, SHIELDED, STAINLESS-STEEL COUPLINGS CONFORMING TO CISPI-310, WITH STAINLESS-STEEL CORRUGATED SHIELD, STAINLESS-STEEL BANDS AND TIGHTENING DEVICES, AND ASTM C-564, RUBBER SLEEVE; OR SCHEDULE 40 PVC DRAIN, WASTE AND VENT (DWV) PIPE AND FITTINGS, ASTM D-2665 WITH SOLVENT CEMENT JOINTS INSTALLED IN STRICT ACCORDANCE WITH MANUFACTURER'S RECOMMENDATIONS.

SANITARY SEWER/GREASE WASTE AND VENT BELOW GROUND: SANITARY SEWER PIPE AND FITTINGS SHALL BE EITHER CAST IRON, ASTM A-74, SERVICE WEIGHT, HUB AND SPIGOT PATTERN WITH ASTM C-564 RESILIENT GASKETS; OR HUBLESS CAST-IRON PIPE AND FITTINGS, ASTM A 888, CISPI-301, WITH HEAVY DUTY JOINTS CONFORMING TO ASTM C-1540 EQUAL TO HUSKY SD-4000, WITH HEAVY DUTY TYPE 304 STAINLESS STEEL SHIELDED COUPLINGS HAVING 4 SEALING CLAMPS FOR PIPE SIZES 1-1/2" THRU 4" AND 6 SEALING CLAMPS FOR PIPE SIZES 5" THRU 10"; OR SCHEDULE 40 PVC DRAIN, WASTE AND VENT (DWV) PIPE AND FITTINGS, ASTM D-2665 WITH SOLVENT CEMENT JOINTS INSTALLED IN STRICT ACCORDANCE WITH MANUFACTURER'S RECOMMENDATIONS.

PIPE SUPPORTS: PIPING SHALL BE SUPPORTED FROM BUILDING STRUCTURE IN A NEAT, PERMANENT AND STABLE MANNER. WHERE BUILDING STRUCTURAL MEMBERS ARE NOT LOCATED TO SUIT EXACT REQUIREMENTS FOR PIPING SUPPORTS, THE CONTRACTOR SHALL FURNISH AND INSTALL SUCH ADDITIONAL STRUCTURAL STEEL MEMBERS AS MAY BE REQUIRED TO SAFEGUARD PIPING INSTALLATION AND BUILDING STRUCTURE.

PIPE PAINTING: ALL UNINSULATED STEEL PIPING SHALL BE THOROUGHLY CLEANED, PRIMED AND PAINTED. PIPE CLEANING SOLVENT SHALL BE A NON-OILY SOLVENT EQUAL TO STODDARD SOLVENT OR HI-FLASH COAL TAR NAPHTHA. PRIME COATING MATERIAL SHALL BE ALKYD ZINC CHROMATE. FINISH MATERIAL SHALL BE ALUMINUM ALKYD PAINT. SURFACE PREPARATION AND PAINT APPLICATION SHALL BE IN STRICT ACCORDANCE WITH PAINT MANUFACTURER'S RECOMMENDATIONS.

PIPE INSULATION: ALL HOT AND COLD WATER PIPING SHALL BE INSULATED. PIPING LOCATED IN INACCESSIBLE LOCATIONS SHALL BE INSULATED WITH NOMINAL 1/2" THICK ELASTOMERIC FOAM INSULATION EQUAL TO ARMSTRONG ARMAFLEX 22. ALL JOINTS SHALL BE MITERED AND SEALED WITH INSULATION MANUFACTURER'S APPROVED ADHESIVE EQUAL TO ARMSTRONG 520-620 INSULATION ADHESIVE. EXPOSED AND ACCESSIBLE PIPING SHALL BE INSULATED WITH FIBERGLASS PIPE INSULATION WITH ALL-SERVICE JACKET. HOT WATER PIPING INSULATION SHALL BE 1" THICK. COLD WATER PIPING INSULATION SHALL BE 1/2" THICK WITH VAPOR BARRIER. VAPOR BARRIER AT COLD WATER PIPING JOINTS SHALL BE MAINTAINED BY MEANS OF MASTIC AND TAPE. ALL FITTINGS, VALVES, ETC. SHALL BE INSULATED WITH THE SAME MATERIAL AND PROVIDED WITH PLASTIC FITTING COVERS. FLAME SPREAD AND SMOKE-DEVELOPED INDEXES SHALL NOT EXCEED 25/50.

PIPE TESTING:

POTABLE WATER: ALL WATER PIPING SHALL BE TESTED BEFORE COVERING. PIPING SYSTEM SHALL BE SUBJECTED TO A HYDROSTATIC TEST AT 150 PSI AND SHALL REMAIN TIGHT FOR A PERIOD OF AT LEAST TWO (2) HOURS. TESTS SHALL COMPLY TO AWWA STANDARD C-60-77, SECTION 4.1.

SANITARY SEWER: SANITARY SEWER PIPING SHALL BE TESTED BEFORE COVERING. ALL OPENINGS, EXCEPT HIGHEST VENT SHALL BE PLUGGED AND THE SYSTEM FILLED WITH WATER TO 10'-0" ABOVE HIGHEST FIXTURE CONNECTED. SYSTEM SHALL STAND WITHOUT LEAK OR LOSS OF WATER FOR A PERIOD OF NOT LESS THAN FOUR (4) HOURS.

STERILIZATION: ALL POTABLE WATER SYSTEM PIPING, FITTINGS AND FIXTURES SHALL BE STERILIZED (DISINFECTED) AND FLUSHED PRIOR TO USE IN ACCORDANCE WITH THE LATEST EDITION OF AMERICAN WATER WORKS ASSOCIATION STANDARD AWWA C-601.

SOUTH CAROLINA
LEBLANC WELCH CONSULTING ENGINEERS
NO. C00908
CERTIFICATE OF AUTHORIZATION

LEBLANCWELCH
CONSULTING ENGINEERS
25 WOODS LAKE ROAD GREENVILLE SC 29607
PHONE 864-271-6535 FAX 864-271-4973

NARRAMORE ASSOCIATES, INC.
Architects & Planners
AMERICAN INSTITUTE OF ARCHITECTS
P.O. Box 6489 Greenville, SC 29604
310 Mills Ave. Greenville, SC 29605
Phone: 864242681
Fax: 864232502

©2014, NARRAMORE ASSOCIATES, INC.
COPYRIGHT PROTECTED BY FEDERAL LAW

SEAL

NO. 14630
3/26/14

Blanchard & Calhoun COMMERCIAL
2743 PERIMETER PKWY
BLDG 100 STE 370
AUGUSTA, GA 30909

SHELTER COVE TOWNE CTR-BLDG. 104
SHELTER COVE LANE
HWY. 278, MILE MARKER 8
HILTON HEAD ISLAND, SC 29928

REVISIONS

DOCUMENT DATA
Building 104
PROJECT NUMBER
13916
ISSUE DATE
03-26-14

SHELTER COVE
HILTON HEAD, SC

P1.0
14125M1.0

PLUMBING PLANS
BUILDING 104

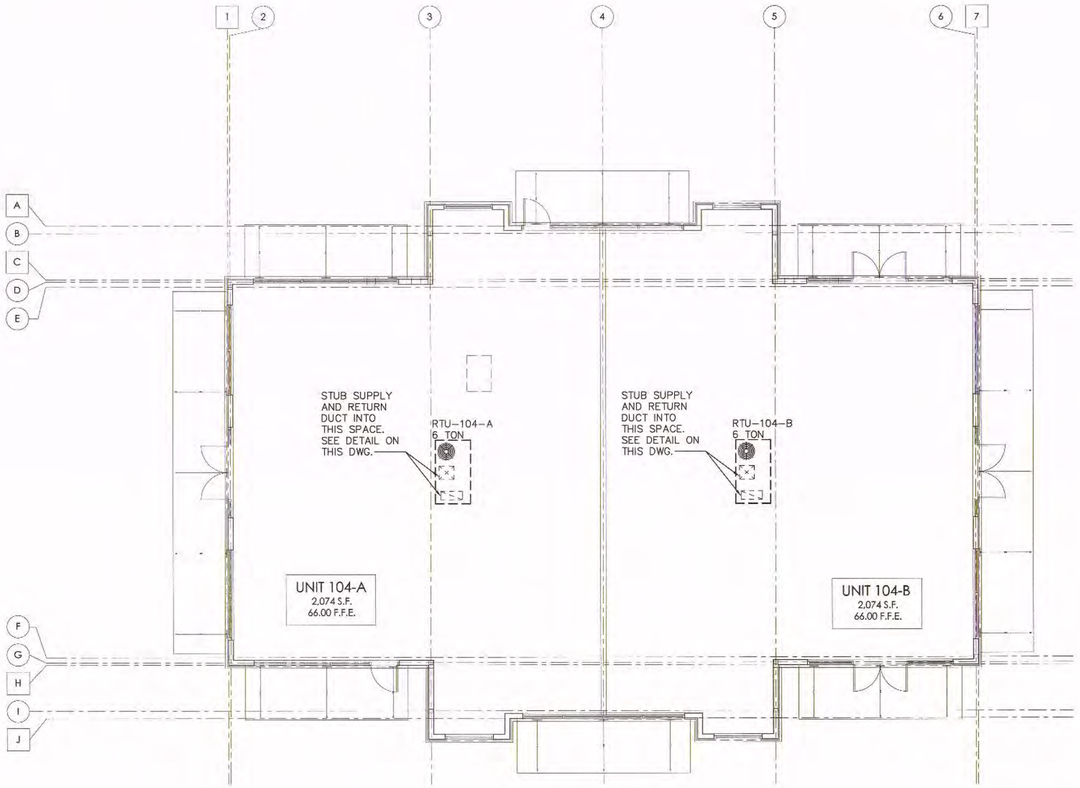

HVAC PLAN

SCALE : 1/8" = 1'-0"

SMOKE DETECTOR NOTE:
MECHANICAL CONTRACTOR SHALL INSTALL SMOKE DETECTORS IN THE RETURN AIR DUCT TO EACH AIR HANDLING UNIT WITH A DESIGN CAPACITY GREATER THAN 2000 CFM TO SHUT DOWN THE UNITS. SMOKE DETECTORS SHALL BE PROVIDED BY ELECTRICAL CONTRACTOR AND INSTALLED IN ACCORDANCE WITH ALL LOCAL CODES AND ORIDINANCES. AS A MINIMUM ONE SMOKE DETECTOR SHALL BE INSTALLED IN THE RETURN DUCT PRIOR TO ANY EXHAUST OR THE INTRODUCTION OF OUTSIDE AIR. COORDINATE THE WIRING AND CONNECTION OF SMOKE DETECTORS WITH ELECTRICAL CONTRACTOR.

PACKAGED ROOFTOP ELECTRIC A/C UNIT SCHEDULE

UNIT NO.	SUPPLY AIR CFM	OUTSIDE AIR CFM	E.S.P. IN W.G.	INDOOR FAN H.P.	ELECTRICAL			SYSTEM COOLING					ELECTRIC HEATING		MANUFACTURER/MODEL NO.	NOM. TONS	WEIGHT LBS.	ACCESSORIES SEE NOTES
					V/PH/HZ	MCA	MAX FUSE	E.D.B. °F	E.W.B. °F	COND. °F	SENSIBLE MBH	TOTAL MBH	HEATING KW	STAGES				
RTU-104-A	2400	600	0.8	2	208/3/60	72	80	77.3	64.7	95	58.1	74.7	22.5	1	LENNOX / LCH072H4	6	1100	1,2,3,4,5,6,7
RTU-104-B	2400	300	0.8	2	208/3/60	72	80	74.6	62.0	95	56.8	72.8	22.5	1	LENNOX / LCH072H4	6	1100	1,2,3,4,5,6,7

ACCESSORIES NOTES:

1. FACTORY ROOF CURB – DOWNFLOW.
2. DIFFERENTIAL ENTHALPY ECONOMIZER.
3. POWERED EXHAUST.
4. DISCONNECT SWITCH
5. THROUGH THE BASE ELECTRICAL
6. LOUVERED COIL GUARDS
7. COSTAL CORROSION COATING.

NOTE:

ROOFTOP A/C UNIT SCHEDULE IS BASED ON UNITS AS MANUFCTURED BY LENNOX. ACCEPTABLE ALTERNATE MANUFACTURERS ARE YORK, CARRIER AND TRANE.

FOR ACCEPTABLE ALTERNATE MANUFACTURERS, CONTRACTOR SHALL BE RESPONSIBLE FOR COORDINATING ELECTRICAL REQUIREMENTS WITH THE ELECTRICAL CONTRACTOR.

VENTILATION REQUIRED PER 2012 IMC

AREA	SQ. FT.	NET OCCUPIABLE AREA (SQ. FT.)	OCCUPANTS	CFM PER SQ.FT.	CFM PER OCC.	REQ'D O.A. (CFM) (OCCUPANCY)	REQ'D O.A. (CFM) (AREA)	REQ'D O.A. TOTAL (CFM) (OCCUPANCY + AREA)	ACTUAL DESIGN O.A. (CFM)
UNIT 104-A	2074	1037	50	0.18	7.5	375	187	562	600
UNIT 104-B	2074	1037	20	0.12	7.5	150	125	275	300

MECHANICAL SPECIFICATIONS:

GENERAL: CONTRACTOR SHALL PROVIDE ALL LABOR, MATERIALS, TOOLS, EQUIPMENT AND MANAGEMENT NECESSARY OR REASONABLY INCIDENTAL TO COMPLETE THE WORK SHOWN ON THE DRAWINGS AND/OR DESCRIBED IN THE SPECIFICATIONS.

CODES AND ORDINANCES: ALL WORK PERFORMED UNDER THIS CONTRACT SHALL BE IN STRICT ACCORDANCE WITH REQUIREMENTS OF THE STANDARD MECHANICAL CODE OF IMC, NFPA, STATE AND LOCAL LAWS AND CODES, AND ALL LAWS, RULES AND REGULATIONS OF PUBLIC BODIES HAVING JURISDICTION.

INTERFERENCES: CONTRACTOR SHALL VISIT THE SITE AND INSPECT THE AREA WHERE THE WORK IS TO BE PERFORMED. CONTRACTOR SHALL BE RESPONSIBLE FOR ACCOMMODATING ALL INTERFERENCES WITH THE WORK, OFFSETTING, MODIFYING, AND OTHERWISE FITTING THE EQUIPMENT TO THE SPACE AVAILABLE, AND COORDINATING WITH OTHER DRAWINGS FOR CONSTRUCTION DETAILS, DIMENSIONS, INTERFERENCES, ETC.

GUARANTEE: ALL MATERIALS AND WORKMANSHIP PROVIDED SHALL BE WARRANTED AGAINST DEFECTS FOR A PERIOD OF ONE YEAR FROM THE DATE OF FINAL ACCEPTANCE OF THE WORK.

CLEAN-UP: ALL DEBRIS, RUBBISH, SCRAPS, ETC. SHALL BE CLEANED UP AT THE END OF EACH WORK DAY. AT THE COMPLETION OF THE WORK, ALL NEW CONSTRUCTION WORK AND MATERIALS SHALL BE CLEANED UP OF MARKINGS, DIRT, ETC. AND LEFT IN A CLEAN AND SIGHTLY CONDITION, READY FOR USE BY THE OWNER.

PIPE PAINTING: ALL UNINSULATED UNCONCEALED PIPING INDOORS SHALL BE CLEANED, PRIMED AND PAINTED. PIPE CLEANING SOLVENT SHALL BE A NON-OILY SOLVENT EQUAL TO HI-FLASH COAL TAR NAPHTHA. PRIME COATING MATERIAL SHALL BE ALKYD ZINC CHROMATE. FINISH MATERIAL SHALL BE ALKYD PAINT, COLOR AS SELECTED BY ARCHITECT. PREPARATION AND APPLICATION SHALL BE PER MANUFACTURERS' SPECIFICATIONS.

ROOF OPENINGS, WHERE REQUIRED, SHALL BE DEFINED AND LOCATED BY THE HVAC SUBCONTRACTOR AND CONSTRUCTED BY THE GENERAL CONTRACTOR. HVAC CONTRACTOR SHALL FURNISH AND SET ROOF CURBS.

DUCTWORK: DUCTWORK SHALL BE CONSTRUCTED OF LOCK-FORMING GALVANIZED STEEL SHEET. DUCTWORK SHALL BE CONSTRUCTED AND REINFORCED IN ACCORDANCE WITH THE MOST RECENT EDITION OF THE "HVAC DUCT CONSTRUCTION STANDARD – METAL AND FLEXIBLE" AS PUBLISHED BY THE SHEET METAL AND AIR CONDITIONING CONTRACTORS NATIONAL ASSOCIATION, INC. (SMACNA). DUCTWORK SHALL BE CONSTRUCTED AND REINFORCED ACCORDING TO THE TABLE FOR 1" W.G. DUCT DESIGN PRESSURE. DUCT SHALL BE SUPPORTED BY STRAP HANGERS PROPERLY SECURED TO THE BUILDING STRUCTURE. ALL ELBOWS SHALL BE PROVIDED WITH APPROVED TURNING VANES.

DUCT INSULATION: RECTANGULAR SUPPLY AND RETURN AIR DUCTWORK SHALL BE INSULATED WITH SCHULLER "PERMACOTE LINACOUSTIC" FLEXIBLE COATED FIBERGLASS LINER. LINER SHALL BE 1" THICK, 2-LB. DENSITY, WITH APPROVED AIR-SIDE SURFACE COATING. INSTALL PER MANUFACTURER'S RECOMMENDATIONS. ALL INSULATION SHALL BE VAPOR SEALED PER MANUFACTURER'S RECOMMENDATIONS.

HVAC SYSTEM CONTROL WIRING SHALL BE PROVIDED BY THE HVAC CONTRACTOR AND SHALL MEET IMC AND NEC REQUIREMENTS. HVAC CONTROL SYSTEMS SHALL PROVIDE A COMPLETE AND OPERABLE SYSTEM OF TEMPERATURE CONTROL.

CONTRACTOR SHALL ARRANGE ROOFTOP A/C UNITS TO PROVIDE EFFICIENT CONNECTION OF S.A. AND R.A. DUCTS. ANY CHANGE IN SIZE, WEIGHT, LOCATION, OR ARRANGEMENT OF HVAC EQUIPMENT SHALL BE EVALUATED BY THE HVAC CONTRACTOR FOR BUILDING LOADING, STRUCTURAL INTEGRITY OF THE SUPPORT SYSTEM, DUCT CONNECTIONS, AND GAS AND ELECTRICAL SERVICES, AND HE SHALL SUBMIT REVISED DRAWINGS AND DETAILS TO ACCOMMODATE THE CHANGES.

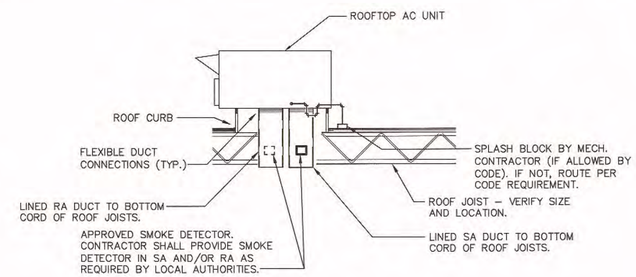

NOTE:
SMOKE DETECTOR SHALL BE PROVIDED WITH AUDIBLE AND VISUAL ALARMS PER CODE.

ROOFTOP UNIT DETAIL

SCALE: NONE

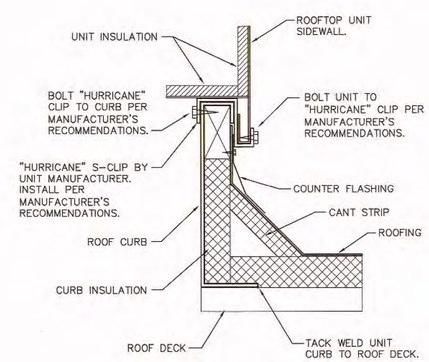

ROOFTOP UNIT CURB DETAIL

SCALE: NONE

NARRAMORE ASSOCIATES, INC.
Architects & Planners
AMERICAN INSTITUTE OF ARCHITECTS
P.O. Box 8433 Greenville, SC 29604
310 Mills Ave. Greenville, SC 29605
Phone: 864242-9691
Fax: 864232-5202

©2014 NARRAMORE ASSOCIATES, INC.
COPYRIGHT PROTECTED BY FEDERAL LAW

SEAL

3/26/14

Blanchard & Calhoun COMMERCIAL
2743 PERIMETER PKWY
BLDG 100 STE 370
AUGUSTA, GA 30909

SHELTER COVE TOWNE CTR.-BLDG. 104

SHELTER COVE LANE
HWY. 278, MILE MARKER 8
HILTON HEAD ISLAND, SC 29928

REVISIONS

DOCUMENT DATA
Building 104
PROJECT NUMBER
13916
ISSUE DATE
03-26-14

SOUTH CAROLINA LEBLANC WELCH CONSULTING ENGINEERS NO.C00908 CERTIFICATE OF AUTHORIZATION

LEBLANCWELCH
CONSULTING ENGINEERS
25 WOODS LAKE ROAD GREENVILLE SC 29607
PHONE 864-271-6535 FAX 864-271-4973

SHELTER COVE
HILTON HEAD, SC

M1.0

14125M1.0

HVAC PLAN/DETAILS
BUILDING 104

NOTES:

1. CONTRACTOR TO PROVIDE 4'X4'X3/4" EXTERIOR A.P.A. PLYWOOD BOARD AND 4'X4' NEMA 3R ENCLOSURE FOR TELEPHONE EQUIPMENT. VERIFY SIZE OF ENCLOSURE WITH LOCAL UTILITY. SEE DETAIL 2/E2.0.
2. ALTERNATE A1: LOCATE FUSED DISCONNECT AND METER AT TENANT SHOPS. FOR THIS ALTERNATE A WIREWAY WOULD NOT BE REQUIRED. SEE DETAIL 5/E2.0.
3. UNDERGROUND ELECTRICAL SERVICE TO UTILITY TRANSFORMER. SEE CIVIL DRAWINGS FOR LOCATION. CHECK WITH UTILITY FOR ALL REQUIREMENTS. (TYPICAL)

PANELBOARD SCHEDULE

PANEL LLA — TYPE: SQUARE 'D' - NQOD — 120/208 VOLTS 3 ϕ 4 W

MOUNTING: SURFACE — NEMA 3R w/ BOLT-ON BREAKERS — 125 AMP MAIN CKT. BKR.

BRANCH BREAKERS

ITEM	AMP RATING	POLE	CIR NO	PHASE LOADING A		PHASE LOADING B		PHASE LOADING C		CIR NO	AMP RATING	POLE	ITEM
SPARE	20	1	1	--	1000					2	20	2	SITE LIGHTING
SPARE	20	1	3			--	1000			4			
SPARE	20	1	5					--	1000	6	20	2	SITE LIGHTING
CANOPY LTG.(VIA. LCA)	20	1	7	880	1000					8			
CANOPY LTG.(VIA. LCA)	20	1	9			880	1000			10	20	2	PYLON SIGN
CANOPY LTG.(VIA. LCA)	20	1	11					880	1000	12			
TENANT EMERG. LIGHTING	20	1	13	300	--					14			SPACE
SPARE	20	1	15			--	--			16			
SPARE	20	1	17					--	--	18			
SPARE	20	1	19	--	--					20			
SPARE	20	1	21			--	--			22			
SPARE	20	1	23					--	--	24			
SPACE			25	--	--					26			
			27			--	--			28			
			29					--	--	30			
			31	--	--					32			
			33			--	--			34			
			35					--	--	36			
			37	--	--					38			
			39			--	--			40			
			41					--	--	42			
				1180	2000	880	2000	880	2000				
				3180		2880		2880					

FEEDER 4#1, 1 1/2" C — TOTAL CONN. LOAD 8940 VA's — CONNECTED 25 AMPS

INTEGRATED EQUIP. RATING 25,000 AMPS RMS. SYM.

NOTE: PANEL 'LLA' TO BE RATED FOR SERVICE ENTRANCE USE

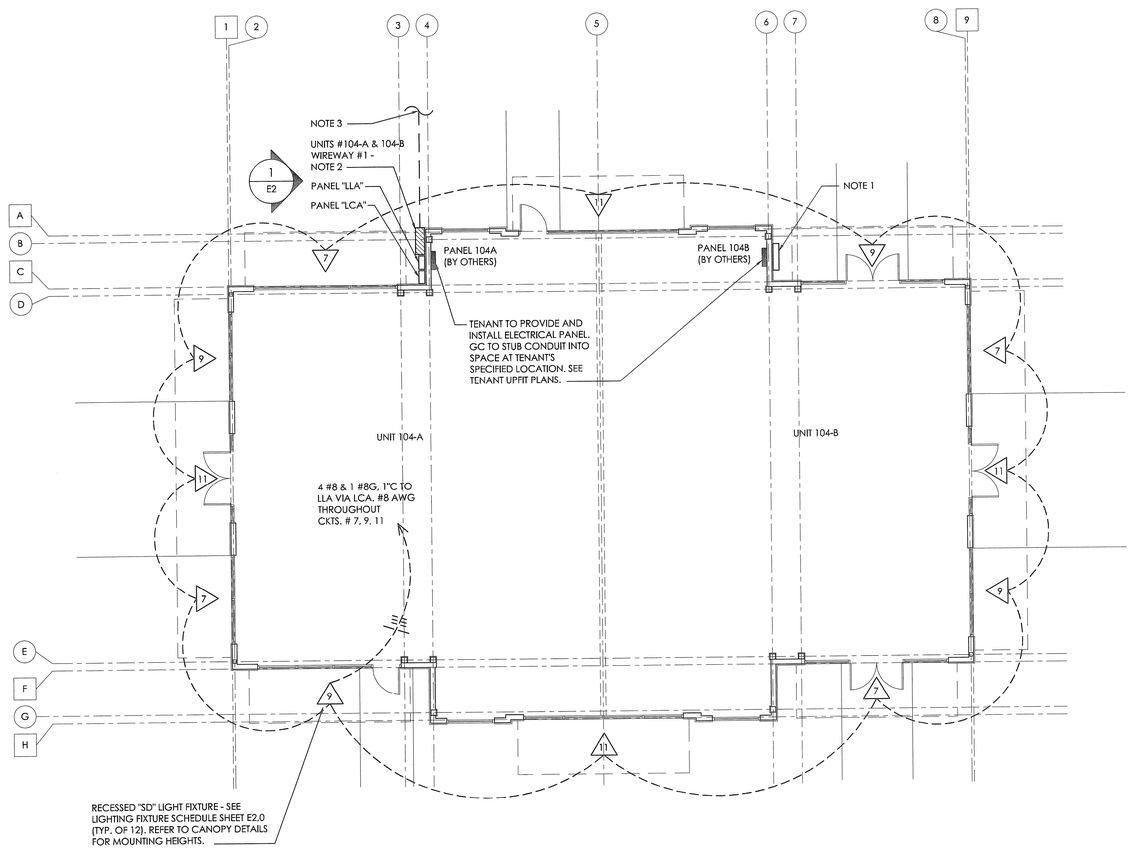

1 OVERALL FLOOR PLAN

SCALE: 1/8"=1'-0"

NARRAMORE ASSOCIATES, INC.
Architects & Planners
AMERICAN INSTITUTE OF ARCHITECTS
P.O. Box 8438 Greenville, SC 29604
310 Mills Ave. Greenville, SC 29605
Phone: 864.242.9881
Fax: 864.232.5202
plans@narramore-architects.com

©2014, NARRAMORE ASSOCIATES, INC. COPYRIGHT PROTECTED BY FEDERAL LAW

SEAL

SOUTH CAROLINA PROFESSIONAL ENGINEER NO. 7953 ROGER S. PASSMORE REGISTERED

3-27-14

Blanchard & Calhoun COMMERCIAL

2743 PERIMETER PKWY
BLDG 100 STE 370
AUGUSTA, GA 30909

SHELTER COVE TOWNE CTR-BLDG. 104

32 SHELTER COVE LANE - UNITS 150 & 151
HWY. 278, MILE MARKER 8
HILTON HEAD ISLAND, SC 29928

REVISIONS

DOCUMENT DATA
Building 104
PROJECT NUMBER
13916
ISSUE DATE
03-26-14

SHELTER COVE
HILTON HEAD, SC

E1.0

ELECTRICAL PLAN
BUILDING 104

LIGHTING FIXTURES

A — RECESSED CEILING MOUNTED FLUORESCENT LIGHTING FIXTURE. THE LETTER DENOTES TYPE OF FIXTURE AS SHOWN IN THE FIXTURE SCHEDULE; AND THE NUMBER DENOTES BRANCH CIRCUIT NUMBER.

A / NL — SIMILAR TO ABOVE EXCEPT CIRCUITED AS A NIGHT LIGHT (NL).

WALL MOUNTED HPS LIGHTING FIXTURE. NOTATION SAME AS ABOVE.

RECESSED CEILING MOUNTED EMERGENCY LIGHING UNIT, NOTATION SAME AS ABOVE

WALL MOUNTED COMBINATION EMERGENCY AND EXIT FIXTURE. NOTATION SAME AS ABOVE.

EXHAUST FAN TOILETS - FURNISHED AND INSTALLED UNDER OTHER DIVISIONS OF THE SPECIFICATIONS, BUT POWER WIRED UNDER DIVISION 16.

WIRING DEVICES

SINGLE POLE LIGHTING SWITCH, 20A., 120-277V., FLUSH MOUNTED, UNLESS OTHERWISE INDICATED. 46" A.F.F. WHERE INDICATED, SUBSCRIPT DENOTES CORRESPONDING LIGHT FIXTURE(S) CONTROLLED.

DUPLEX CONVENIENCE RECEPTACLE, 15A., 125V., 3 WIRE, PARALLEL BLADE, GROUNDING TYPE, NEMA 5-15R, FLUSH MOUNTED, UNLESS OTHERWISE INDICATED, 18" A.F.F. PROVIDE NEMA 5-20R IF SINGLE RECEPTACLE ON 20A. CIRCUIT.

WP — RECEPTACLE, SIMILAR TO ABOVE EXCEPT WITH WEATHERPROOF COVER. GFI INDICATES GROUND FAULT INTERRUPTER TYPE.

MISCELLANEOUS CONNECTIONS

WH — WATER HEATER, FURNISHED AND INSTALLED UNDER OTHER DIVISIONS OF THE SPECIFICATIONS, BUT POWER WIRED UNDER DIVISION 16.

UH — SURFACE MOUNTED WALL UNIT HEATER EQUIPPED WITH THERMOSTATIC FAN FASCO #1235 : 1.5 KW / 120V / 1 OUTLET FOR HVAC THERMOSTAT FURNISHED AND INSTALLED UNDER OTHER DIVISIONS OF SPECIFICATIONS.

T — INSTALL EMPTY 3/4" C. CONCEALED TO CORRESPONDING ROOFTOP A/C UNIT.

MISCELLANEOUS DEVICES

100/90/3P/3R 90AF — ISOLATING DISCONNECT SWITCH - NUMBERS INDICATE : AMPERE RATING/ FUSE SIZE (NF INDICATES NON-FUSED)/ NUMBER OF POLES/NEMA ENCLOSURE RATING. FOR FUSIBLE TYPE, FUSES SHALL BE DUAL ELEMENT, TIME DELAY. SIMILAR TO BUSS FUSETRON, ADDITIONAL DATA AS INDICATED:

J — MISCELLANEOUS OUTLET BOX (USUALLY 4" SQUARE OR OCTAGON X 1-1/2" DEEP MINIMUM) WITH COVER. GENERALLY MOUNT CONCEALED ABOVE HUNG CEILING.

GROUNDING SYSTEM

—G— GROUNDING CONDUCTOR, BARE STRANDED COPPER, DIRECTLY BURIED 24" BELOW FINISHED GRADE. (SIZE PER NEC).

TELEPHONE SYSTEM

TELEPHONE OUTLET. SINGLE GANG FLUSH OUTLET MOUNTED 18" A.F.F. UNLESS NOTED OTHERWISE. HOMERUN 3/4" EMPTY CONDUIT CONCEALED TO TELEPHONE EQUIPMENT BOARD. COORDINATE AND ADJUST THE EXACT OUTLET LOCATION IN THE FIELD WITH THE OWNER'S TELEPHONE INSTALLER.

ELECTRICAL NOTES

1. COMPRESSION CONNECTORS SHALL BE USED ON SERVICE CABLES. ONE-HOLE COMPRESSION LUGS SHALL BE USED AT UTILITY TRANSFORMER BUS CONNECTIONS. CORROSION RESISTANT BOLTS, NUTS, & WASHERS SHALL BE USED. BELVILLE WASHERS OF PROPER TORQUE SHALL BE USED AT XFMR BUS CONNECTIONS.
2. AT WIREWAY, USE T & B (OR EQUIVALENT) "C" OR "H" TAP COMPRESSION CONNECTORS TO BOND ALL SAME PHASE CABLES TOGETHER. SEE 4/E2.0
3. ENSURE ALL WIREWAY, CABINET, PANELS AND DISCONNECT HOUSINGS ARE ROPERLY BONDED TO GROUND.
4. RUN A CONTINUOUS 3/0 CU BARE GROUND FROM REBAR IN FOOTER NEAREST WIREWAY TO GROUND ROD (10'x3/4") TO THE NEUTRAL CABLES IN WIREWAY. EXOTHERMIC WELD OR MECHANICALLY BOND CABLE TO THE GROUND ROD. GROUND CABLE IN FOOTER SHALL BE 10 FT. MIN. LENGTH, WIRE WRAPPED TO REBAR EVERY 2 FT. MIN. ANY STEEL CONDUIT USED TO PROTECT GND. CABLE MUST BE PROPERLY BONDED TO THE GROUND CABLE AT BOTH ENDS OF CONDUIT WITH GROUNDING BUSHINGS.
5. AT EACH WIREWAY LOCATION-RUN A 2/0 CU GROUND CABLE FROM THE WIREWAY GROUND CABLE TO THE ROOF BAR JOIST. MECHANICALLY BOND TO BAR JOIST AT TWO LOCATIONS. COORDINATE THIS RUN SO THAT CABLE IS INCONSPICUOUS AS POSSIBLE AND NON-INTERFERING WITH WALL FINISHES, ETC.
6. ENSURE WATER PIPES, SPRINKLER RISER, ETC. ARE PROPERLY BONDED TO GROUND.
7. ALL ABOVE GRADE WIRE SHALL BE TYPE THHN OR XHHW, 600V, 90°C RATED. BELOW GRADE SHALL BE XHHW-2, 600V, 90° RATED.
8. AT WIREWAY-IF CONDUIT AND/OR BUSHINGS ARE METAL, BOND TOGETHER AND THEN BOND TO WIREWAY GROUND. ENSURE TRANSFORMER END OF CONDUITS ARE NOT BONDED TO THE TRANSFORMER GROUND. THE TRANSFORMER FRAME AND SECONDARY NEUTRAL (X) SHOULD BE BONDED TOGETHER AND GROUNDED BY THE UTILITY. CONTRACTOR SHOULD COORDINATE AND ENSURE THIS GND. IS SECURE AND AT LEAST 10' (MIN.) FROM CUSTOMER GROUND SYSEM.
9. FAULT CURRENT-PANEL RATINGS ARE BASED ON UTILITY TRANSFORMER OF 500 KVA OR LESS WITH 5.5% Z OR HIGHER. CONTRACTOR SHALL COORDINATE WITH LOCAL UTILITY AND VERIFY SHORT CIRCUIT REQUIREMENTS.
10. PROVIDE PROVISIONS FOR PADLOCKS ON ALL PANELS, HOFFMAN ENCLOSURES AND DISCONNECTS. ALL ENCLOSURES TO BE NEMA 3R.
11. SEE DRAWINGS E1.0 FOR SCHEDULE OF CIRCUITS AT PANEL "LLA".
12. COORDINATE ARRANGMENT AND INSTALLATION OF WIREWAYS, METERS, AND DISCONNECTS WITH LOCAL UTILITY COMPANY.

ABBREVIATIONS

AFF	ABOVE FINISHED FLOOR	MCB	MAIN CIRCUIT BREAKER
BKR	BREAKER	NTS	NOT TO SCALE
CU	COPPER	PH	PHASE
CKT	CIRCUIT	PNL	PANEL
DWG	DRAWING	RECPT.	RECEPTACLE
FU	FUSE	REQD	REQUIRED
FWE	FURNISHED WITH EQUIPMENT	SW	SWITCH
GFI	GROUND FAULT INTERRUPTER	UNO	UNLESS NOTED OTHERWISE
LTG	DEVICE LIGHTING	W/	WITH
MLO	MAIN LUGS ONLY	WH	WATER HEATER
		WP	WEATHER PROOF

LIGHTING FIXTURE SCHEDULE

☐ TYPE SD

DESCRIPTION	RECESSED SQUARE FIXT.
MANUFACTURER LAMPS VOLT-AMPS, VOLTS	SECURITY LIGHTING SYSTEMS 852-DL-175MH-FP-OW-MG-120. 175 WATT METAL HALIDE. 220V.A., , 120V

TENANT SPACES

☐ TYPE D

DESCRIPTION	COMBINATION EMERGENCY AND EXIT FIXTURE
MANUFACTURER LAMPS VOLT-AMPS, VOLTS	SURELITES #CCX-70-RWH-DH, TWO 9WPAR36, 6V 50 V.A., 120 V. * INDICATES #CCXH WITH 6T-6-W REMOTE HEAD

☐ TYPE E

DESCRIPTION	WALL MOUNTED EMERGENCY LIGHTING UNIT
MANUFACTURER LAMPS VOLT-AMPS, VOLTS	SURELITES #XR-9 TWO 25W 6V DC 50 V.A., 120 V.

ELECTRICAL LEGEND

PANELBOARDS

208/120V., 3 PHASE, 4W. LIGHTING & APPLIANCE PANEL BOARD. SEE SCHEDULE FOR COMPLETE DATA.

RACEWAYS

BRANCH CIRCUIT WIRING, INSTALLED OVERHEAD OR IN WALL (CONCEALED WHERE POSSIBLE). SHORT HASH MARKS INDICATE NO. OF PHASE CONDUCTORS. LONGER HASH MARKS DENOTE NEUTRAL CONDUCTORS. UNLESS OTHERWISE NOTED OR SPECIFIED USE #12 AWG WIRE. DETERMINE CONDUIT SIZE FROM HASH MARKS UTILIZING CONDUIT FILL TABLES IN N.E.C. 1/2" IS MINIMUM CONDUIT SIZE. NO HASH MARKS INDICATE 2 #12, 1 #12 GROUNDING CONDUCTOR IN 1/2" CONDUIT. (NOTE THAT ALL CONDUITS MUST CONTAIN AN EQUIPMENT GROUNDING CONDUCTOR, AND THAT THIS CONDUCTOR IS NOT INDICATED WITH HASH MARKS). BX-CABLE IS PERMITTED AS ALLOWED BY NEC.

SIMILAR TO ABOVE, EXCEPT RUN IN OR UNDER FLOOR SLAB OR UNDERGROUND. CONDUIT CONDUCTOR SIZES SHALL BE AS INDICATED. MINIMUM SIZE CONDUIT SHALL BE 3/4".

1.3.5 — HOMERUN TO PANELBOARD. NUMBERS INDICATE BRANCH CIRCUITS.

–6VDC– SIMILAR TO ABOVE, EXCEPT CONTAINING 6VDC EMERGENCY LIGHTING CONDUCTORS. MINIMUM CONDUCTOR SIZE SHALL BE #10 AWG.

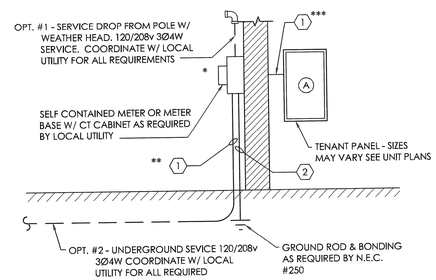

IF LOCAL UTILITY AND CODES ALLOW, EACH UNIT MAY RECEIVE ITS OWN METER AS SHOWN ABOVE. SERVICE MAY BE OBTAINED FROM A SERVICE DROP OR LATERAL UNDERGROUND. PER LOCAL ELECTRICAL PROVIDER. THIS ALSO APPLIES TO PANEL "LLA".

SERVICE	(A)	(1) ** COPPER	(2)
200A	200A MCB	4 #3/0, 2"C	#4
225A	225A MCB	4 #4/0, 2"C	#2
400A	400A MCB	4 #500 KCM, 3"	#1/0
600A	600A MCB	2 (4 #350 KCM, 3")	#2/0

* NEMA 3R DISCONNECT & MLO PANEL IS ACCEPTABLE

** ALUMINUM
200A - 4 #250 KCM, 2 1/2"C
225A - 4 #300KCM, 2 1/2"C
400A - 2 RUNS OF 4 #250 KCM, 2 1/2"C
600A - 2 RUNS OF 4 #500 KCM, 3"C

*** IF MLO PANEL:
ADD COPPER GROUND
200A - #6
225A - #4
400A - #3
600A - #1

5 ELECTRICAL ALTERNATE A1
NOT TO SCALE

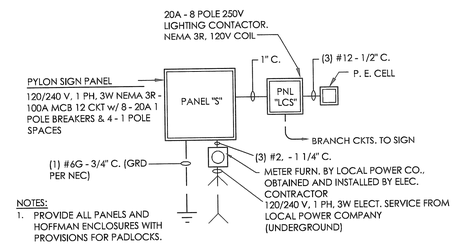

NOTES:
1. PROVIDE ALL PANELS AND HOFFMAN ENCLOSURES WITH PROVISIONS FOR PADLOCKS.

3 PYLON PANEL RISER DIAGRAM
NOT TO SCALE

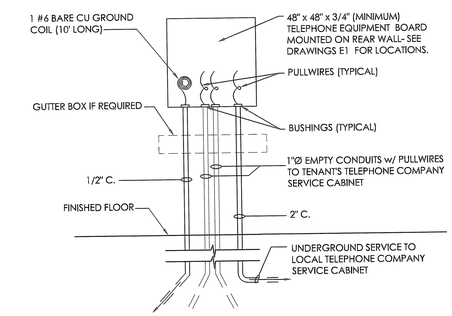

2 TELEPHONE SERVICE DIAGRAM
NOT TO SCALE

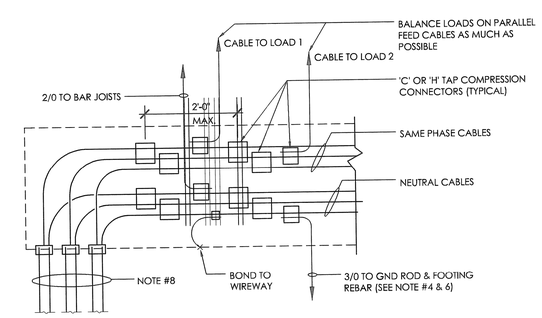

4 TYPICAL WIREWAY CONNECTIONS
NOT TO SCALE

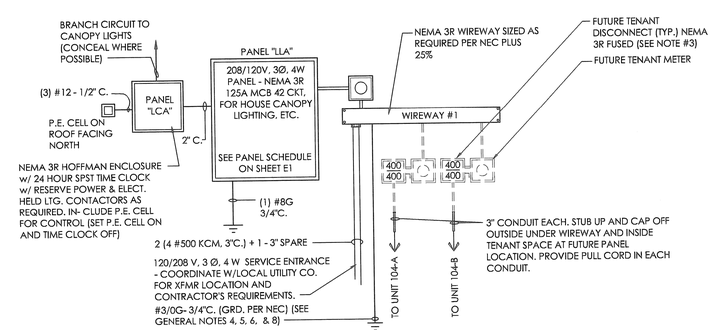

1 RISER DIAGRAM - WIREWAY #1
NOT TO SCALE

NARRAMORE ASSOCIATES, INC.
Architects & Planners
AMERICAN INSTITUTE OF ARCHITECTS
P.O. Box 8438 Greenville, SC 29604
310 Mills Ave. Greenville, SC 29605
Phone: 864.242.9881
Fax: 864.232.5202
plane@narramore-architects.com

©2014, NARRAMORE ASSOCIATES, INC.
COPYRIGHT PROTECTED BY FEDERAL LAW

SEAL
SOUTH CAROLINA PROFESSIONAL ENGINEER
NO. 7953
REGISTERED ROGER S. PASSMORE
7-22-14

Blanchard & Calhoun COMMERCIAL
2743 PERIMETER PKWY
BLDG 100 STE 370
AUGUSTA, GA 30909

SHELTER COVE TOWNE CTR-BLDG. 104
32 SHELTER COVE LANE - UNITS 150 & 151
HWY. 278, MILE MARKER 8
HILTON HEAD ISLAND, SC 29928

REVISIONS

DOCUMENT DATA
Building 104
PROJECT NUMBER
13916
ISSUE DATE
03-26-14

SHELTER COVE
HILTON HEAD, SC
E2.0
ELECTRICAL DETAILS
BUILDING 104

DESIGN TEAM/DRB COMMENT SHEET

The comments below are staff recommendations to the Design Review Board (DRB) and do NOT constitute DRB approval or denial.

PROJECT NAME: Shelter Cove Towne Centre Building 104 – ALTERATION/ADDITION

DRB#: DR 140020

DATE: May 13, 2014

RECOMMENDATION: Approval ☐ Approval with Conditions ☒ Denial ☐

An updated landscape plan has been provided for review & approval by the DRB. No changes were made to proposed building elevations, colors, or materials based on DRB review on 4/22/14. Staff recommends that the applicant revise the metal awning color to a less bright/shiny color. Shelter Cove ARB has approved the building alterations/additions as submitted.

Town of Hilton Head Island

Community Development Department
One Town Center Court
Hilton Head Island, SC 29928
Phone: 843-341-4757 Fax: 843-842-8908
www.hiltonheadislandsc.gov

FOR OFFICIAL USE ONLY
Date Received: _____
Accepted by: _____
App. #: DR_____
Meeting Date: _____

Applicant/Agent Name: Don Baker, AIA Company: Square Feet Island Architects
Mailing Address: 10 E Garrison Place City: HHI State: SC Zip 29928
Telephone: 290 6666 Fax: _____ E-mail: don@squarefeethhi.com
Project Name: South Beach Racquet Club Project Address: 230 So Sea Pines Drive
Parcel Number [PIN]: R 5 5 0 0 1 7 0 0 0 1 1 2 7 0 0 0 0
Zoning District: _____ Overlay District(s): _____

DESIGN REVIEW BOARD (DR) SUBMITTAL REQUIREMENTS

Digital Submissions may be accepted via e-mail by calling 843-341-4757.

Project Category: *** **This is Old Business for DR 130051** ***

_____New Development – Conceptual
_____New Development – Final, indicate Project Number
✓ Alteration/Addition
_____Minor External Change

Submittal Requirements for ***All*** projects:

N/A Private Architectural Review Board (ARB) Notice of Action (if applicable): When a project is within the jurisdiction of an ARB, the applicant shall submit such ARB's written notice of action per LMO Section 16-3-1004. Submitting an application to the ARB to meet this requirement is the responsibility of the applicant.

N/A Filing Fee, New Development $175, Alterations/Additions $100, Minor External $50 cash or check made payable to the Town of Hilton Head Island.

Additional Submittal Requirements:

New Development – Conceptual Approval

_____A survey (1"=30' minimum scale) of property lines, existing topography and the location of trees meeting the tree protection regulations of Sec. 16-3-405, and if applicable, location of bordering streets, marshes and beaches.

_____A site analysis study to include specimen trees, access, significant topography, wetlands, buffers, setbacks, views, orientation and other site features that may influence design.

_____A draft written narrative describing the design intent of the project, its goals and objectives and how it reflects the site analysis results.

_____Context photographs of neighboring uses and architectural styles.

_____Conceptual site plan (to scale) showing proposed location of new structures, parking areas and landscaping.

_____Conceptual sketches of primary exterior elevations showing architectural character of the proposed development, materials, colors, shadow lines and landscaping.

Additional Submittal Requirements:

New Development – Final Approval

_____ A final written narrative describing how the project conforms with the conceptual approval and design review guidelines of Sec. 16-4-503.

_____ Final site development plan meeting the requirements of Sec. 16-3-303.F.

_____ Final site lighting and landscaping plans meeting the requirements of Sec. 16-3-304 and Sec. 16-3-305.

_____ Final floor plans and elevation drawings (1/8"=1'-0" minimum scale) showing exterior building materials and colors with architectural sections and details to adequately describe the project.

_____ A color board (11"x17" maximum) containing actual color samples of all exterior finishes, keyed to the elevations, and indicating the manufacturer's name and color designation.

_____ Any additional information requested by the Design Review Board at the time of concept approval, such as scale model or color renderings, that the Board finds necessary in order to act on a final application.

Additional Submittal Requirements:

Alterations/Additions *and* Minor External Changes

__✓__ A written narrative describing how project conforms to design guidelines of Section 16-4-503.

__✓__ Photographs and/or drawings of existing development.

__✓__ Drawings of the proposed development – 11"x 17".

__✓__ Material/color samples of existing and proposed changes - 8 ½"X 14" *Maximum*; Stating manufacturer and material name

Note: All application items must be received by the deadline date in order to be reviewed by the DRB per LMO Section 16-3-106.

A representative for each agenda item is strongly encouraged to attend the meeting.

Are there recorded private covenants and/or restrictions that are contrary to, conflict with, or prohibit the proposed request? If yes, a copy of the private covenants and/or restrictions must be submitted with this application. ☐**YES** ☑**NO**

To the best of my knowledge, the information on this application and all additional documentation is true, factual, and complete. I hereby agree to abide by all conditions of any approvals granted by the Town of Hilton Head Island. I understand that such conditions shall apply to the subject property only and are a right or obligation transferable by sale.

I further understand that in the event of a State of Emergency due to a Disaster, the review and approval times set forth in the Land Management Ordinance may be suspended.

Dan Bake

SIGNATURE

23 APR 2014

DATE

6 EXISTING 4' TALL OLEANDER

6' FENCE COVERED WITH MATURE YELLOW JESSAMINE

5 EXISTING MATURE LAGUSTRUM

L2 TOE OF BERM

3 INDICA AZALEA 5 GAL

CRAPE MYRTLE 5 GAL

PINESTRAW MULCH ADDED TO EXISTING PLANT BED

TOP OF BERM

EXISTING LARGE MATURE WAX MYRTLE

15 PH

EXISTING PINESTRAW MULCH BED

18 PH

3 OLEANDER 5-GAL

10-12' TALL EXISTING MATURE LAGUSTRUM

RELOCATED STEPPING STONE WALK

1-20' CRAPE MYRTLE-EXISTING

INCORRECT LOCATION

80.00

BICYCLE FACILITY: LANDSCAPE PLAN

SCALE: 1"=10'-0"

Improvements to:
South Beach Racquet Club
South Beach Bicycle Rental
220 South Sea Pines Drive
Sea Pines Plantation
Hilton Head Island, SC 29928
PROP. I.D.: 9050 017 000 1127 0000

Project Number: 5eBaRaQ
Issue Date: 24 APR 2014
Issuance: BUILDING

Drawing History:
1. 16 SEPT 2013 SPARC REVIEW
2. 26 SEPT 2013 SPARC REVIEW 1
3. 14 OCT 2013 SPARC REVIEW 2
4. 21 OCT 2013 SPARC REVIEW 3
5. 06 DEC 2013 100 DRB

Sheet Title:
LANDSCAPE PLAN: BICYCLE

SHEET
BICYCLE FACILITY
L.S.-B

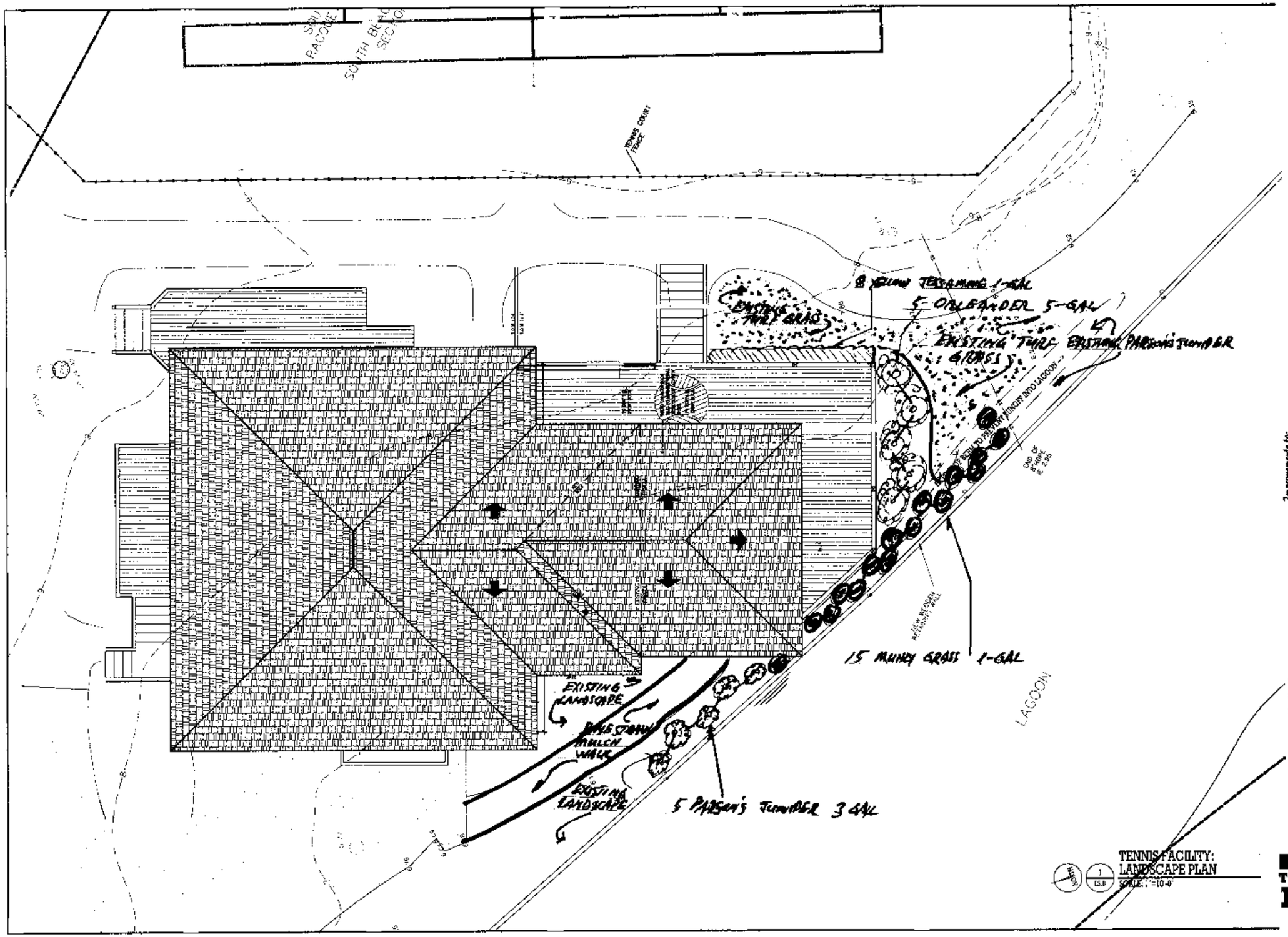

Improvements to:

South Beach Racquet Club
South Beach Bicycle Rental
220 South Sea Pines Drive
Sea Pines Plantation
Hilton Head Island, SC 29928
PROP. I.D.: R510 017 000 1127 0000

3

Copyright 2014, by Square Feet

Project Number 5686R60
Issue Date 14 APR 2014
Issuance HDC DRB

Drawing History

1.	16 SEPT 2013	HDC RZA
2.	06 SEPT 2013	SPARC REVIEW 1
3.	14 OCT 2013	SPARC REVIEW 2
4.	21 OCT 2013	SPARC REVIEW 3
5.	09 DEC 2013	HDC DRB

Sheet Title
LANDSCAPE PLAN: TENNIS

SHEET
TENNIS FACILITY
L.S.-T

DESIGN TEAM/DRB COMMENT SHEET

The comments below are staff recommendations to the Design Review Board (DRB) and do NOT constitute DRB approval or denial.

PROJECT NAME: South Beach Racquet Club – ALTERATION/ADDITION DRB#: 130051

DATE: May 13, 2014

RECOMMENDATION: Approval ☒ Approval with Conditions ☐ Denial ☐

The applicant has submitted a landscape plan for the approved racquet club addition and bike storage building.

Town of Hilton Head Island

Community Development Department
One Town Center Court
Hilton Head Island, SC 29928
Phone: 843-341-4757 Fax: 843-842-8908
www.hiltonheadislandsc.gov

FOR OFFICIAL USE ONLY
Date Received: _____
Accepted by: _____
App. #: DR_____
Meeting Date: _____

Applicant/Agent Name: Kristen Mansfield Company: Wood + Partners Inc.
Mailing Address: P.O. Box 23949 City: HHI State: SC Zip: 29925
Telephone: 843.681.6618 Fax: 843.681.7086 E-mail: kmansfield@woodandpartners.com
Project Name: The Beach Club at Sea Pines Resort Project Address: #87 North Sea Pines Drive
Parcel Number [PIN]: R 5 5 0 0 1 7 0 0 A 0 0 1 A 0 0 0 0
Zoning District: PD-1 Overlay District(s): Corridor Overlay

DESIGN REVIEW BOARD (DR) SUBMITTAL REQUIREMENTS

Digital Submissions may be accepted via e-mail by calling 843-341-4757.

Project Category:

_____New Development – Conceptual
_____New Development – Final, indicate Project Number DR 130012
_X_ Alteration/Addition
_____Minor External Change

Submittal Requirements for ***All*** projects:

_X_ Private Architectural Review Board (ARB) Notice of Action (if applicable): When a project is within the jurisdiction of an ARB, the applicant shall submit such ARB's written notice of action per LMO Section 16-3-1004. Submitting an application to the ARB to meet this requirement is the responsibility of the applicant.

_____ Filing Fee, New Development $175, Alterations/Additions $100, Minor External $50 cash or check made payable to the Town of Hilton Head Island.

Additional Submittal Requirements:

New Development – Conceptual Approval

_____ A survey (1"=30' minimum scale) of property lines, existing topography and the location of trees meeting the tree protection regulations of Sec. 16-3-405, and if applicable, location of bordering streets, marshes and beaches.

_____A site analysis study to include specimen trees, access, significant topography, wetlands, buffers, setbacks, views, orientation and other site features that may influence design.

_____A draft written narrative describing the design intent of the project, its goals and objectives and how it reflects the site analysis results.

_____Context photographs of neighboring uses and architectural styles.

_____Conceptual site plan (to scale) showing proposed location of new structures, parking areas and landscaping.

_____Conceptual sketches of primary exterior elevations showing architectural character of the proposed development, materials, colors, shadow lines and landscaping.

Additional Submittal Requirements:

New Development – Final Approval

_____ A final written narrative describing how the project conforms with the conceptual approval and design review guidelines of Sec. 16-4-503.

_____ Final site development plan meeting the requirements of Sec. 16-3-303.F.

_____ Final site lighting and landscaping plans meeting the requirements of Sec. 16-3-304 and Sec. 16-3-305.

_____ Final floor plans and elevation drawings (1/8"=1'-0" minimum scale) showing exterior building materials and colors with architectural sections and details to adequately describe the project.

_____ A color board (11"x17" maximum) containing actual color samples of all exterior finishes, keyed to the elevations, and indicating the manufacturer's name and color designation.

_____ Any additional information requested by the Design Review Board at the time of concept approval, such as scale model or color renderings, that the Board finds necessary in order to act on a final application.

Additional Submittal Requirements:

Alterations/Additions *and* Minor External Changes

__X__ A written narrative describing how project conforms to design guidelines of Section 16-4-503.

_____ Photographs and/or drawings of existing development.

__X__ Drawings of the proposed development – 11"x 17".

_____ Material/color samples of existing and proposed changes - 8 ½"X 14" *Maximum*; Stating manufacturer and material name

Note: All application items must be received by the deadline date in order to be reviewed by the DRB per LMO Section 16-3-106.

A representative for each agenda item is strongly encouraged to attend the meeting.

Are there recorded private covenants and/or restrictions that are contrary to, conflict with, or prohibit the proposed request? If yes, a copy of the private covenants and/or restrictions must be submitted with this application. ☐**YES** ☒**NO**

To the best of my knowledge, the information on this application and all additional documentation is true, factual, and complete. I hereby agree to abide by all conditions of any approvals granted by the Town of Hilton Head Island. I understand that such conditions shall apply to the subject property only and are a right or obligation transferable by sale.

I further understand that in the event of a State of Emergency due to a Disaster, the review and approval times set forth in the Land Management Ordinance may be suspended.

K.M. Mahl — 4.28.14

SIGNATURE — DATE

The Beach Club at Sea Pines Resort

#87 North Sea Pines Drive
Hilton Head Island, SC

DRB Change Request Summary

April 10, 2014

Per direction from Ownership, a revision to the roof line of the Ocean Bar at the Sea Pines Beach Club is desired; as the current roof line interferes with the beach and horizon line views when viewing from the Level 2 porch and event space. Several options have been discussed, with this option being selected by Ownership. This option allows most of the existing structure to remain in place as constructed, with only the highest portion at the peak being affected. The cedar shingle peak w/ louvers and gable ends has been replaced by a low pitched hip roof element of SSMR (copper) that allows for desired views. Also added, on the ocean side of the bar, is a gable with board and batten siding and SSMR (copper).

ARB SEA PINES PLANTATION
ARCHITECTURAL REVIEW BOARD
OFFICE (843) 671-5533 • FAX (843) 671-5368

April 9, 2014

Mr. Cliff McMackin
Sea Pines Resort
P.O. Box 7000
Hilton Head Island, SC 29938

Re: SEA PINES BEACH CLUB - 5817

Dear Cliff:

The Sea Pines Architectural Review Board approved the roof change on the outdoor bar at the above referenced address.

Please call me if you have any questions.

Sincerely,

Ken Rabon
Administrator

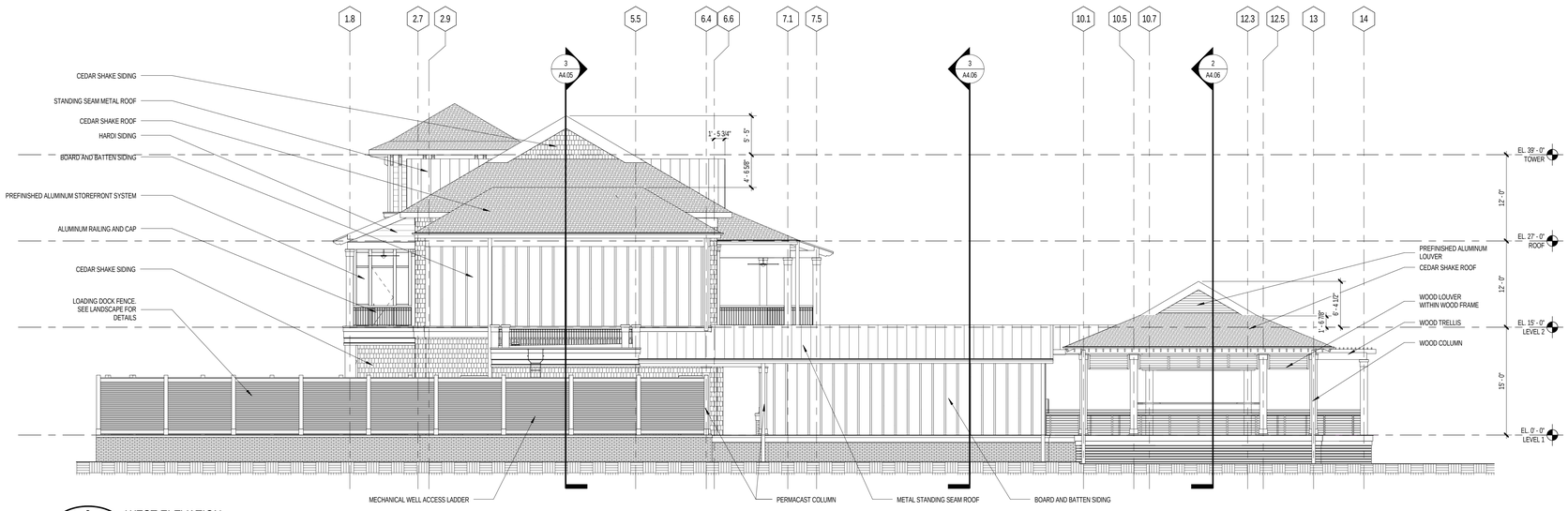

2 A4.02 WEST ELEVATION
SCALE: 1/8" = 1'-0"

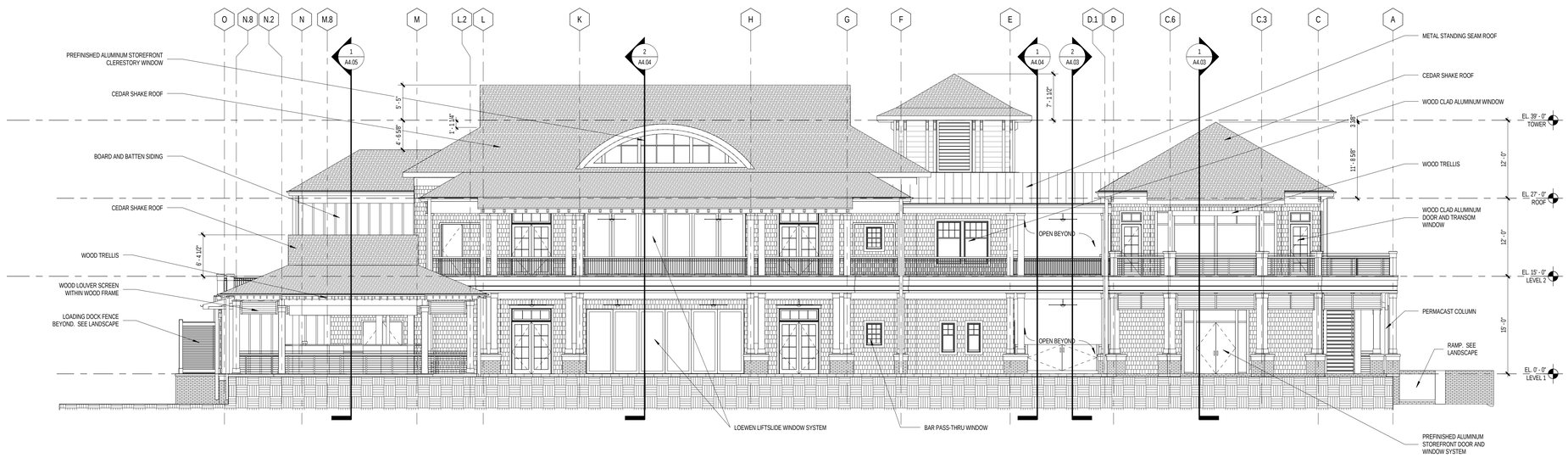

1 A4.02 SOUTH ELEVATION
SCALE: 1/8" = 1'-0"

PROJECT NUMBER: 20120007.02 PROJECT NAME: SEA PINES BEACH CLUB
SHEET NUMBER: A4.02 - OVERALL BUILDING ELEVATIONS
M:\2012\20120007\d-7 drawings\d-7.1 revit_beach club\users\20120007_2013_beach club_toala.rvt
5/28/2013 11:38:32 AM

COOPER CARRY
ATLANTA WASHINGTON NEW YORK NEWPORT BEACH

191 Peachtree Street NE
Suite 2400
Atlanta, GA 30303-1770
(404) 237-2000
www.coopercarry.com

© Copyright Cooper Carry 2013

SCOPE DOCUMENTS

The Construction Documents have not been completed therefore this drawing may be incomplete or not coordinated. The documents issued indicate the general scope of the Project. The Contractor is responsible for complete and coordinated pricing and Work, and shall include all items necessary for the proper execution and completion of the Project, whether indicated or not. All components of the Project shall comply with any and all requirements of national, state, and local codes. The Contractor shall inform the Owner and Architect of any omissions, inconsistencies or errors in the information provided. If no notice is given and any omissions, inconsistencies or errors are discovered, the Architect's decisions on items of Work included in the scope shall be binding on the Contractor, when consistent with the general scope and quality of the Project.

ISSUANCES

No.	Drawing Issue Description	Date
	50% Construction Document Set	05/03/2013

SEA PINES BEACH CLUB

87 North Sea Pines Drive
Hilton Head Island
South Carolina, 29928
♦
Riverstone Partners

OVERALL BUILDING ELEVATIONS

BOB NEAL	20120007.02
Principal-in-Charge	Project No.
MANNY DOMINGUEZ	06/07/2013
Project Manager	Date
ADAM TOAL	
Project Architect	
ZACH WILSON	
Staff Architect	

A4.02
Drawing No.

NOT ISSUED FOR CONSTRUCTION

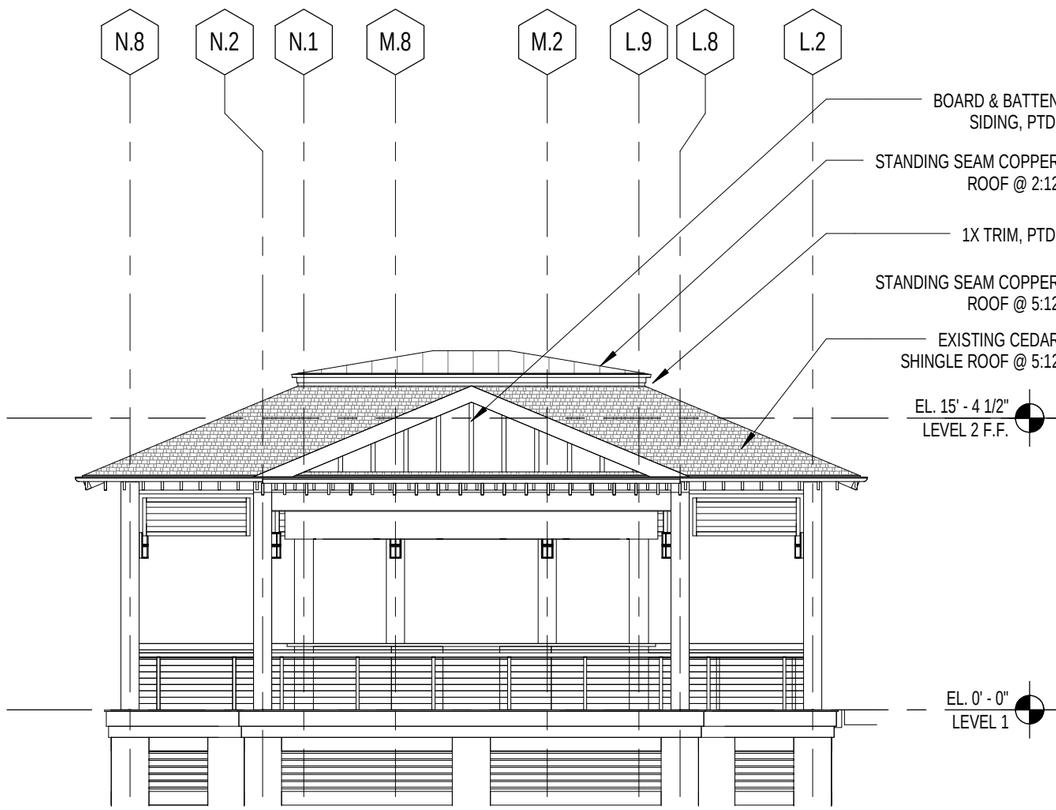

1 / ARB 1 — ARB - OCEAN BAR ELEVATION - EAST

SCALE: 1/8" = 1'-0"

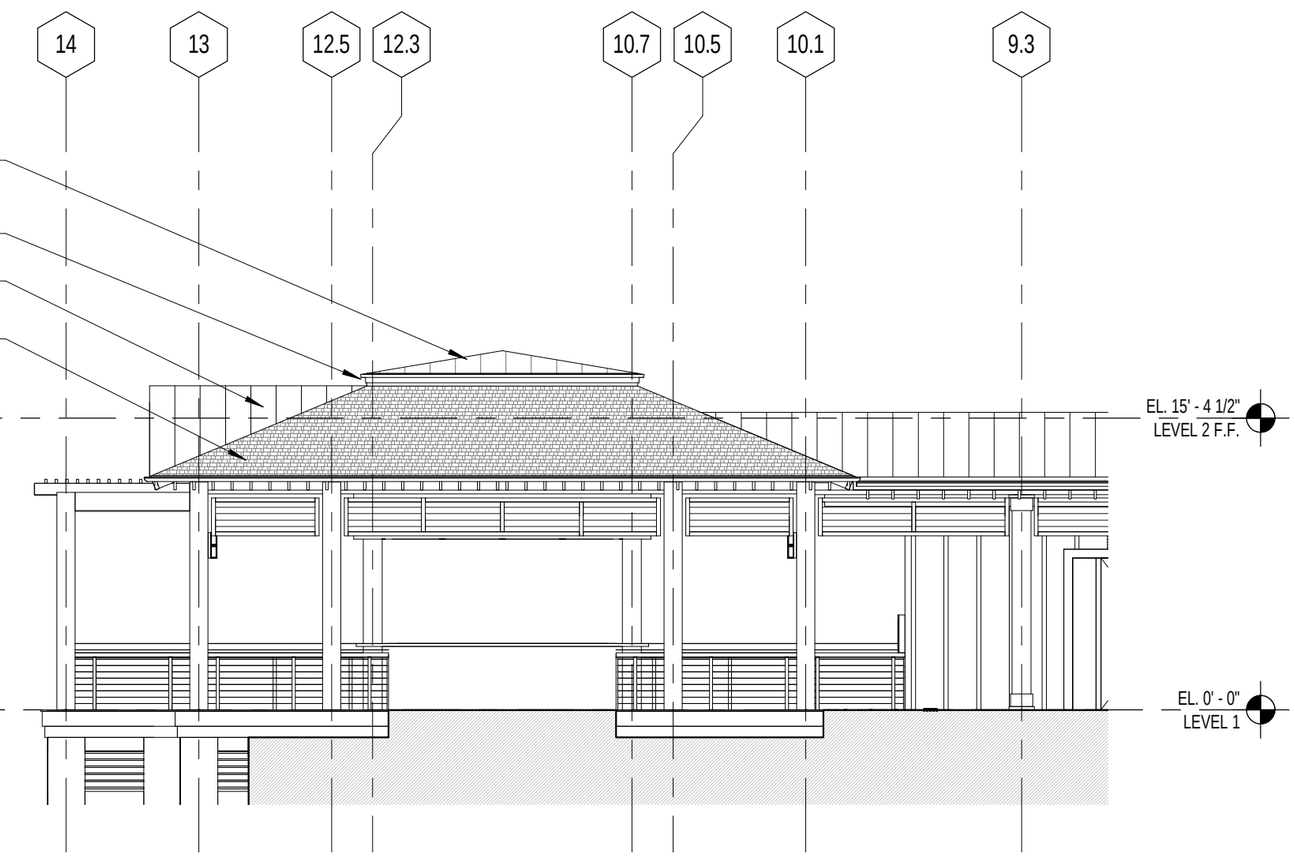

2 / ARB 1 — OCEAN BAR ELEVATION - NORTH

SCALE: 1/8" = 1'-0"

PROJECT N° 20120007.00 | 04/01/14

OCEAN BAR ROOF REDESIGN- ELEVATIONS

SEA PINES BEACH CLUB
87 North Sea Pines Drive
Hilton Head Island
South Carolina, 29928

COOPER CARRY

© 2014 COOPER CARRY, Inc., 191 Peachtree Street NE, Suite 2400, Atlanta, Georgia 30303 Tel. 404-237-2000 Fax 404-237-0276

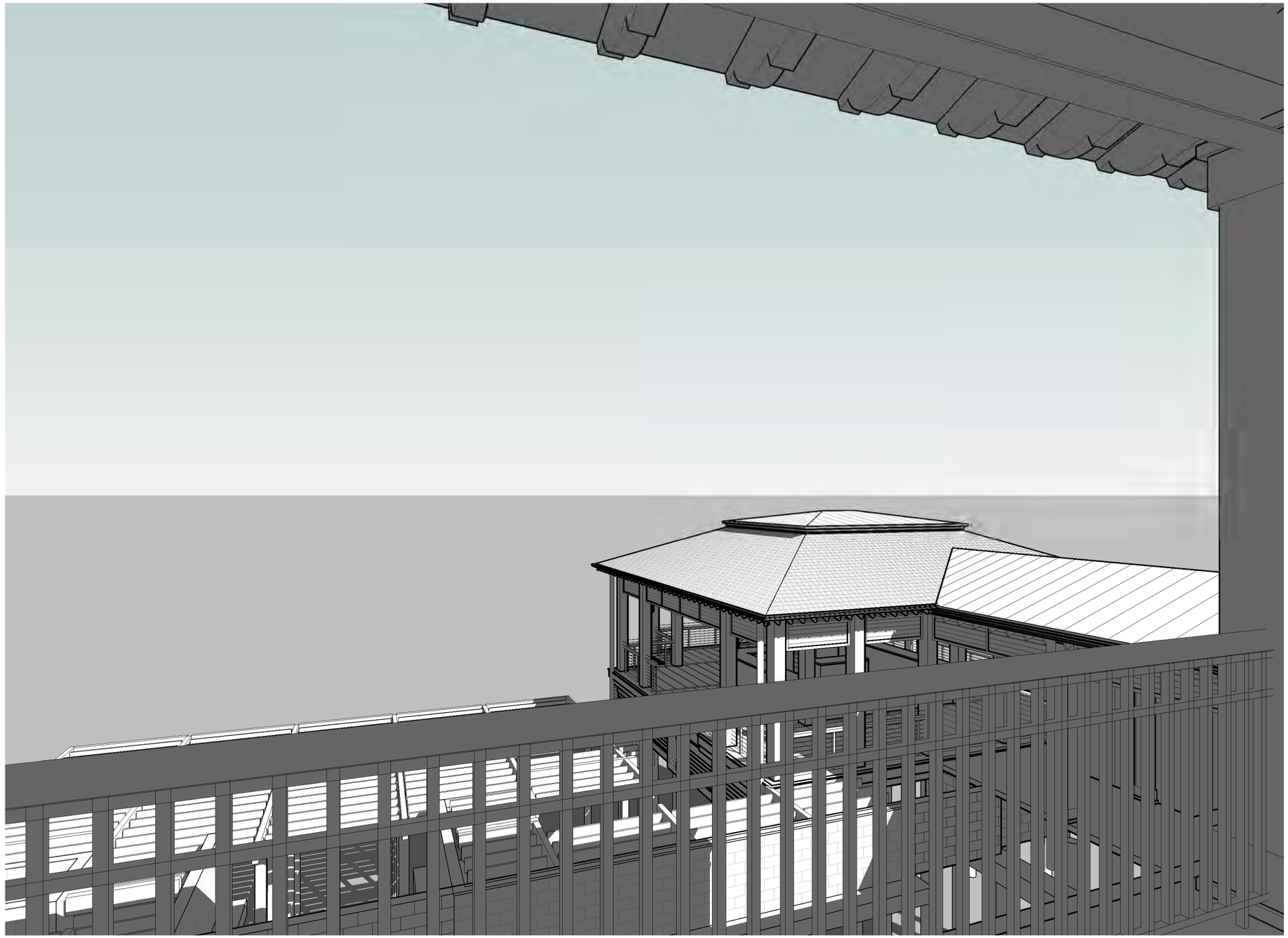

PROJECT N° 20120007.00 | 04/01/14

OCEAN BAR ROOF REDESIGN - VIEW 1

SEA PINES BEACH CLUB
87 North Sea Pines Drive
Hilton Head Island
South Carolina, 29928

COOPER CARRY

© 2014 COOPER CARRY, Inc., 191 Peachtree Street NE, Suite 2400, Atlanta, Georgia 30303 Tel. 404-237-2000 Fax 404-237-0276

PROJECT N° 20120007.00 | 04/01/14

OCEAN BAR ROOF REDESIGN - VIEW 2

SEA PINES BEACH CLUB
87 North Sea Pines Drive
Hilton Head Island
South Carolina, 29928

COOPER CARRY

© 2014 COOPER CARRY, Inc., 191 Peachtree Street NE, Suite 2400, Atlanta, Georgia 30303 Tel. 404-237-2000 Fax 404-237-0276

PROJECT N° 20120007.00 | 04/01/14

OCEAN BAR ROOF REDESIGN - VIEW 3

SEA PINES BEACH CLUB
87 North Sea Pines Drive
Hilton Head Island
South Carolina, 29928

COOPER CARRY

© 2014 COOPER CARRY, Inc., 191 Peachtree Street NE, Suite 2400, Atlanta, Georgia 30303 Tel. 404-237-2000 Fax 404-237-0276

PROJECT N° 20120007.00 | 04/01/14

OCEAN BAR ROOF REDESIGN - VIEW 4

SEA PINES BEACH CLUB
87 North Sea Pines Drive
Hilton Head Island
South Carolina, 29928

COOPER CARRY

© 2014 COOPER CARRY, Inc., 191 Peachtree Street NE, Suite 2400, Atlanta, Georgia 30303 Tel. 404-237-2000 Fax 404-237-0276

DESIGN TEAM/DRB COMMENT SHEET

The comments below are staff recommendations to the Design Review Board (DRB) and do NOT constitute DRB approval or denial.

PROJECT NAME: The Beach Club at Sea Pines Resort – ALTERATION/ADDITION DRB#: 130012

DATE: May 13, 2014

RECOMMENDATION: Approval ☐ Approval with Conditions ☒ Denial ☐

The applicant proposes to revise the roof line of the Ocean Bar at the renovated Sea Pines Beach Club as the current roof line interferes with the beach and horizon line views when viewing from the Level 2 porch and event space. Sea Pines Plantation ARB has approved proposed alteration.

Town of Hilton Head Island

Community Development Department
One Town Center Court
Hilton Head Island, SC 29928
Phone: 843-341-4757 Fax: 843-842-8908
www.hiltonheadislandsc.gov

FOR OFFICIAL USE ONLY
Date Received: 3.25.14
Accepted by: SARAH W
App. #: DR 140019
Meeting Date: _____

Applicant/Agent Name: Simon Mikhael Company: Mediterranean Harbour Bar & Gri
Mailing Address: 136 ninth Avenue Bluffton City: ~~Hilton Head~~ State: SC Zip: 29910
Telephone: 843 415 2046 Fax: _____ E-mail: simonmikhail@gmail.com
Project Name: Building outdoor Bar Project Address: 13 Harbourside lane, HHI 299
Parcel Number [PIN]: R 5 20 012 00B 0019 7121
Zoning District: _____ Overlay District(s): _____

DESIGN REVIEW BOARD (DR) SUBMITTAL REQUIREMENTS

Digital Submissions may be accepted via e-mail by calling 843-341-4757.

Project Category:

_____ New Development – Conceptual
_____ New Development – Final, indicate Project Number
_X_ Alteration/Addition
_____ Minor External Change

Submittal Requirements for ***All*** projects:

_____ Private Architectural Review Board (ARB) Notice of Action (if applicable): When a project is within the jurisdiction of an ARB, the applicant shall submit such ARB's written notice of action per LMO Section 16-3-1004. Submitting an application to the ARB to meet this requirement is the responsibility of the applicant.

_✓_ Filing Fee, New Development $175, Alterations/Additions $100, Minor External $50 cash or check made payable to the Town of Hilton Head Island.

Additional Submittal Requirements:

New Development – Conceptual Approval

_____ A survey (1"=30' minimum scale) of property lines, existing topography and the location of trees meeting the tree protection regulations of Sec. 16-3-405, and if applicable, location of bordering streets, marshes and beaches.

_____ A site analysis study to include specimen trees, access, significant topography, wetlands, buffers, setbacks, views, orientation and other site features that may influence design.

_____ A draft written narrative describing the design intent of the project, its goals and objectives and how it reflects the site analysis results.

_____ Context photographs of neighboring uses and architectural styles.

_____ Conceptual site plan (to scale) showing proposed location of new structures, parking areas and landscaping.

_____ Conceptual sketches of primary exterior elevations showing architectural character of the proposed development, materials, colors, shadow lines and landscaping.

DR140019

Additional Submittal Requirements:

New Development – Final Approval

_____ A final written narrative describing how the project conforms with the conceptual approval and design review guidelines of Sec. 16-4-503.

_____ Final site development plan meeting the requirements of Sec. 16-3-303.F.

_____ Final site lighting and landscaping plans meeting the requirements of Sec. 16-3-304 and Sec. 16-3-305.

_____ Final floor plans and elevation drawings (1/8"=1'-0" minimum scale) showing exterior building materials and colors with architectural sections and details to adequately describe the project.

_____ A color board (11"x17" maximum) containing actual color samples of all exterior finishes, keyed to the elevations, and indicating the manufacturer's name and color designation.

_____ Any additional information requested by the Design Review Board at the time of concept approval, such as scale model or color renderings, that the Board finds necessary in order to act on a final application.

Additional Submittal Requirements:

Alterations/Additions *and* Minor External Changes

✓ A written narrative describing how project conforms to design guidelines of Section 16-4-503.

✓ Photographs and/or drawings of existing development. will submit on 3/26/14

✓ Drawings of the proposed development – 11"x 17".

✓ Material/color samples of existing and proposed changes - 8 ½"X 14" *Maximum*; Stating manufacturer and material name Same as existing stucco - paint

Note: All application items must be received by the deadline date in order to be reviewed by the DRB per LMO Section 16-3-106.

A representative for each agenda item is strongly encouraged to attend the meeting.

Are there recorded private covenants and/or restrictions that are contrary to, conflict with, or prohibit the proposed request? If yes, a copy of the private covenants and/or restrictions must be submitted with this application. ☐**YES** ☐**NO**

To the best of my knowledge, the information on this application and all additional documentation is true, factual, and complete. I hereby agree to abide by all conditions of any approvals granted by the Town of Hilton Head Island. I understand that such conditions shall apply to the subject property only and are a right or obligation transferable by sale.

I further understand that in the event of a State of Emergency due to a Disaster, the review and approval times set forth in the Land Management Ordinance may be suspended.

SIGNATURE _____ DATE 3/25/2014

Mediterranean Harbour Bar & Grill Build up Proposal

Mediterranean Harbour Bar & Grill is a new Mediterranean Restaurant Located at Shelter Cove Marina at 13 Harbourside Lane unit B, With This project Proposal I wish to improve the outdoor seating area by adding an outdoor bar to offer more variety of options to Locals and tourist at the Marina area , the building materials will be ¾" pressure treated wood on each side over 2x6 pressure treated studs, and will be covered by stucco over wire to match existing stucco color and materials that been used on external walls of the building . The top bar will be slate top glued to plywood w/pl400. The outdoor bar will not be equipped with fridges instead we will install 3 ice bin stations to chill cold drinks plus we will build a sink area.

The proposed location of the outdoor bar will be between the 3rd & 4th pillar counting from the far

Will be matching same stucco color of the outdoor wall of the building

We would like to open a Service window to serve guests more efficient from kitchen area directly to outdoor seating

Dimensions for window is ROUGH OPENING: 36-3/8"(w) x 36-3/8"(h) SERVICE OPENING: 14-1/2" (w) X 27" (h)

We are also proposing to improve the flow layout of dining area by moving the service window to the left hand side area towards the service area and install the service window on adjacent wall as shown on picture. New service Window Dimension will be 24"X12". Or what is best fit in the proposed new area.

Regarding plumbing for outdoor bar we will install a line from existing indoor bar by digging a line in floor to outdoor bar area; I draw blue arrow line to show the direction of the plumbing line.

In order to eliminate the grease smell to go to the dining area, we have to raise the kitchen panel grid 8 inches.

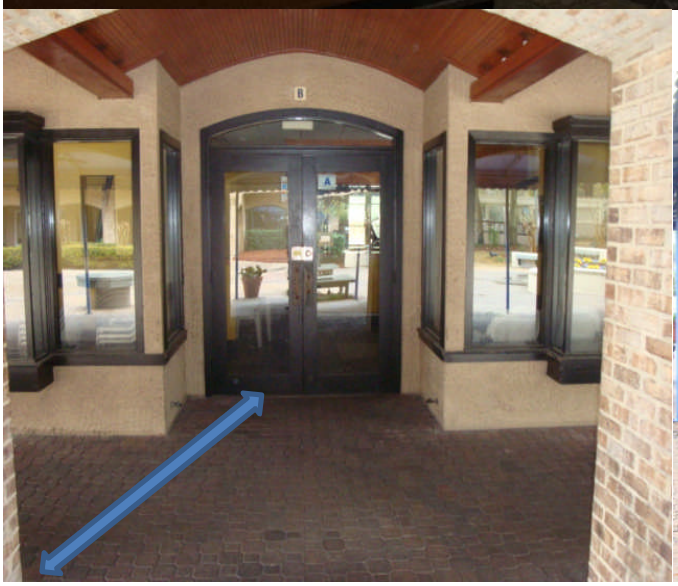

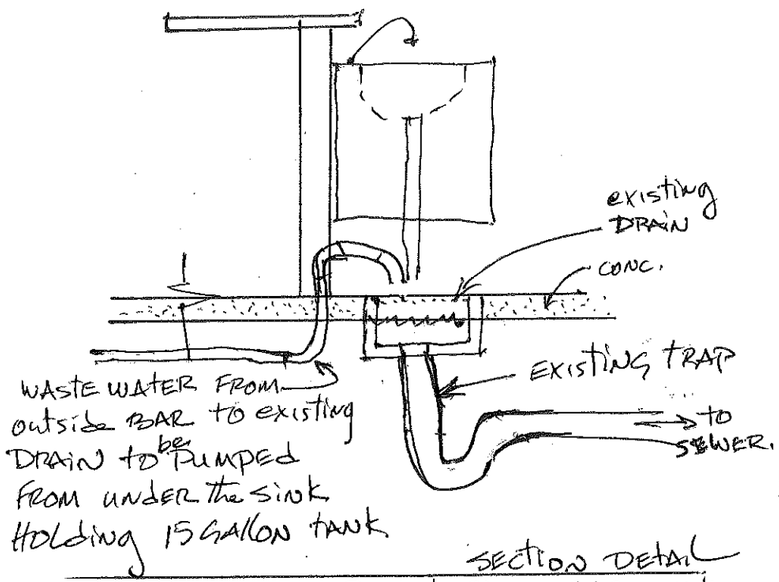

SECTION DETAIL
(401) INTERIOR BAR DRAIN N.T.S.

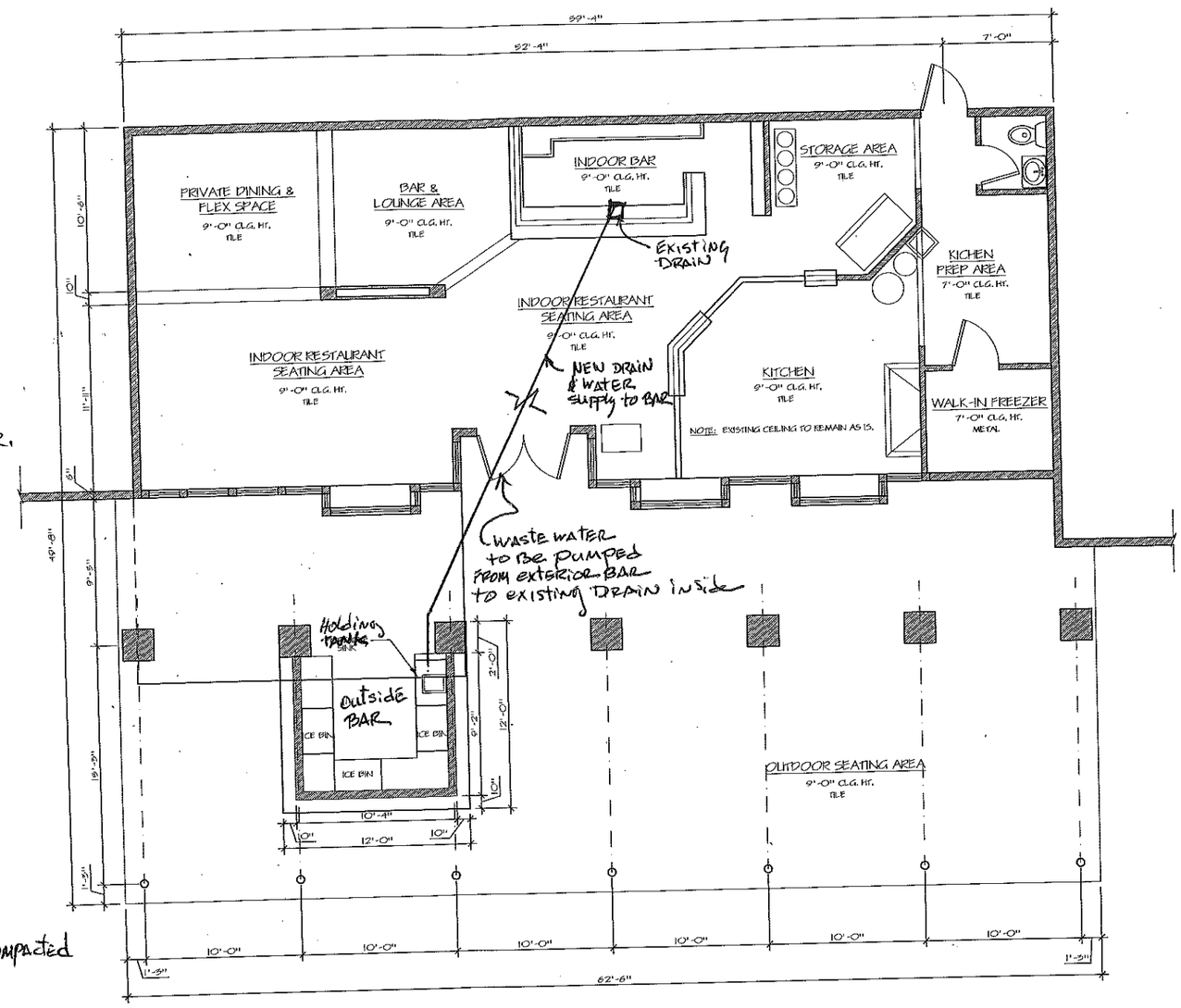

1 FIRST FLOOR PLAN
SCALE: 1/8" = 1'-0"

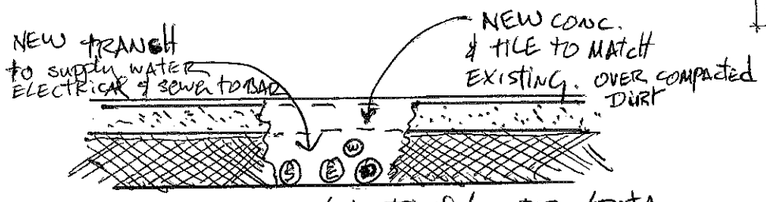

SEWER/ELECTRICAL/WATER/DATA.
PIPING TO EXTERIOR BAR
NEW PIPING SECTION DETAIL
N.T.S.

* NOTE: outside BAR WATER flows through WASTE DRAIN FROM BAR to be PUMPED TO existing DRAIN UNDER INTERIOR BAR

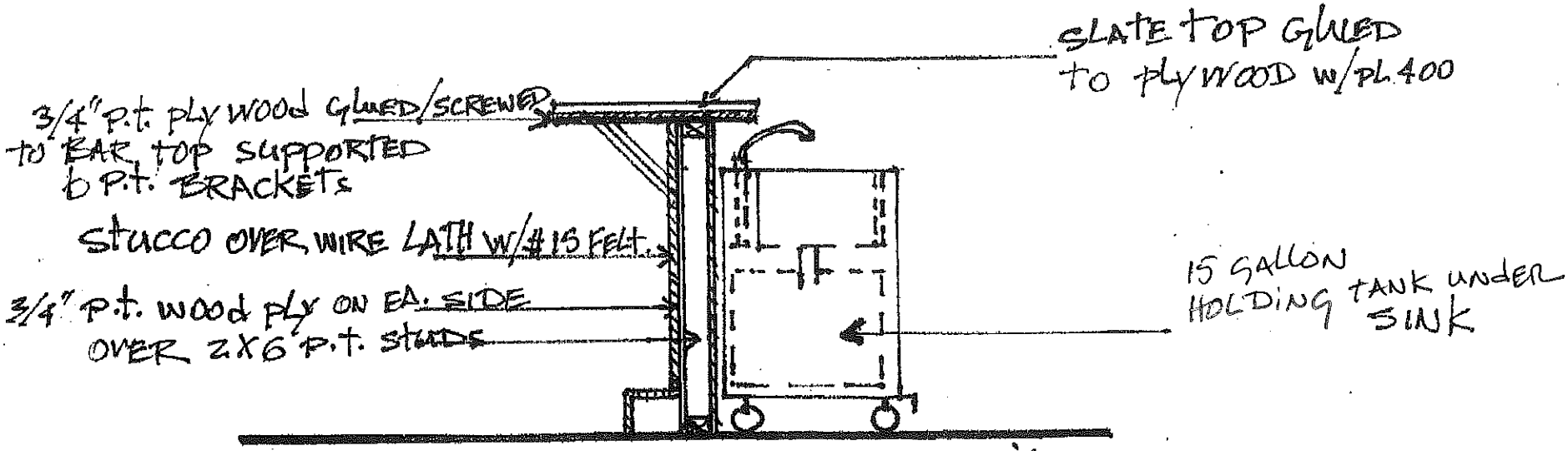

OUTDOOR BAR SECTION DETAIL

N.T.S.

QUIKSERV

we put more in – you get more out

HURRICANE IMPACT WINDOWS

MANUAL, SELF-CLOSING & FULLY AUTOMATIC

MIAMI-DADE COUNTY APPROVED

STANDARD FEATURES

- 3/4″ insulated storm glass
- Shipped fully-assembled and ready to install
- Warranty backed with Nationwide Service Centers
- Weather resistant and sealed to protect from the elements
- Dark bronze or clear anodized aluminum
- Corrosion resistant material: anodized aluminum and #304-#3 finish stainless steel
- Security locking systems
- Maximum security hook-bolt locks
- Dade County Approved (NOA - #11-1206.07)
- State of Florida Approval (#FL-12643.1)
- Automatically lock when unit is closed (SC-models)
- Right or left hand units

OPTIONAL FEATURES

- Custom colors available
- Various glazing options (B/R and Tinted)

SC-4030-IP

MODELS SS-4035E-IP, SC-4030-IP & SC-3030-IP

Quikserv is proud to produce the largest line of Hurricane Impact sliders on the market. These models are self-closing, top hung, single silders. We make both manual opening and fully automatic versions. These units passed large and small impact testing , as well as water infiltration requirements. This series of single sliders has the same excellent quality you have come to expect from Quikserv sliding windows.

Service Opening: **SS-4035E-IP** *20″(w) x 27″(h)*
SC-4030-IP *20″(w) x 27″(h)*
SC-3030-IP *14-1/2″(w) x 27″(h)*

MAXIMUM SECURITY LOCKING SYSTEM

MAXIMUM SECURITY LOCKING SYSTEM

Each Quikserv single-sliding window offers a heavy duty maximum security lock. This hook bolt lock helps to prevent outside intrusion. An easy to grasp thumb-turn allows for ease in operation while locking the unit.

THRU-BEAM PHOTO-ELECTRIC EYE-BAR

THRU-BEAM PHOTO ELECTRIC EYE-BAR

Activated when the attendant stands between the emitter and the receiver. Available on all electric sliders and is best used where there is limited space or tighter working conditions.

MODEL SC-4030-IP

ROUGH OPENING: 48-3/8"(w) x 36-3/8"(h)

SERVICE OPENING: 20" (w) x 27" (h)

MODEL SC-3030-IP

ROUGH OPENING: 36-3/8"(w) x 36-3/8"(h)

SERVICE OPENING: 14-1/2" (w) X 27" (h)

MAIN VIEW

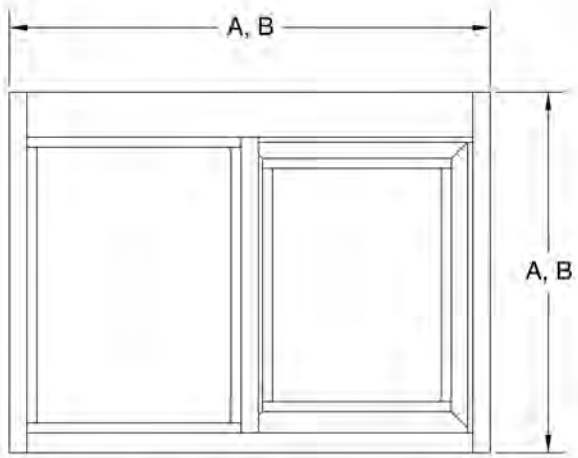

A) SC-4030IP 48" (W) X 36" (H)

B) SC-3030IP 36" (W) X 36" (H)

SIDE VIEW

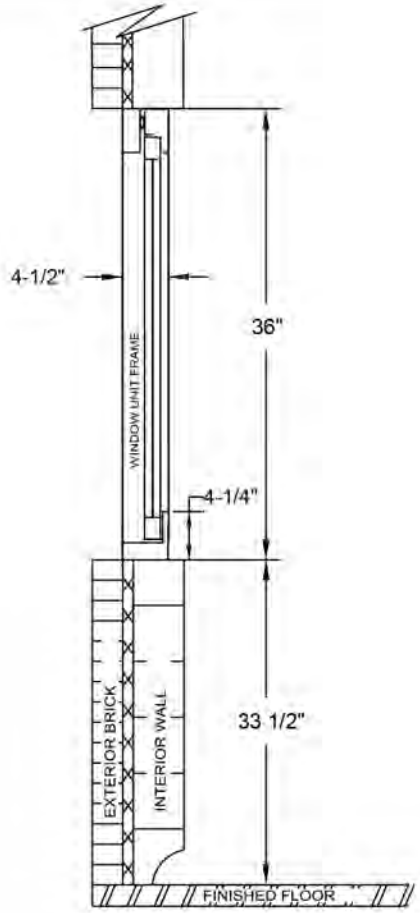

MODEL SS-4035E-IP

ROUGH OPENING: 48-3/8"(w) x 41-3/8"(h)

SERVICE OPENING: 20" (w) X 27" (h)

MAIN VIEW

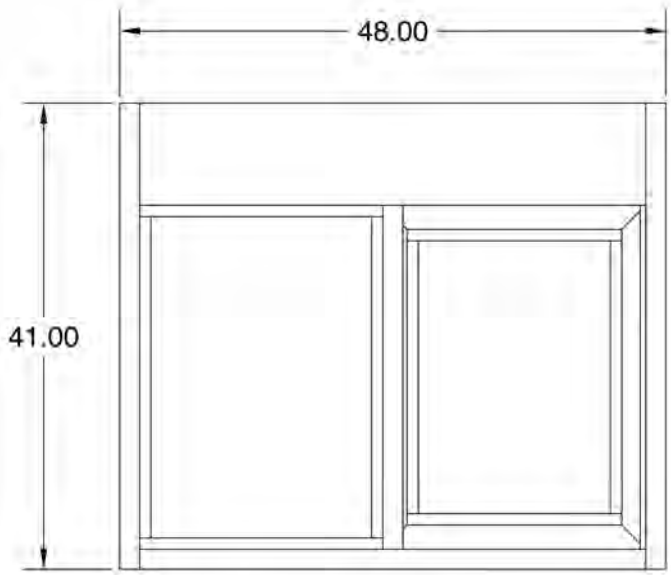

SIDE VIEW

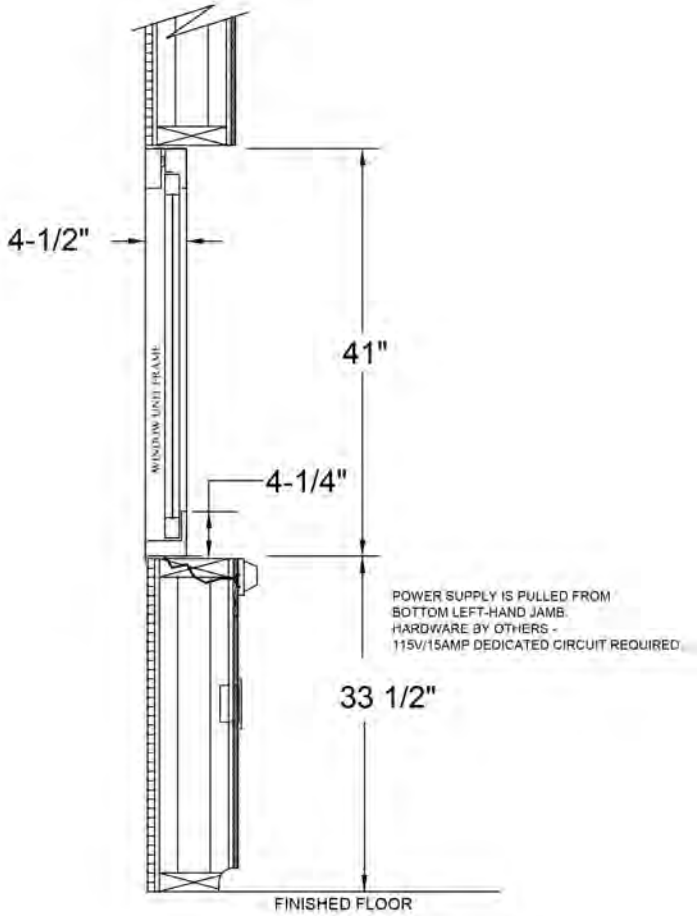

New Portable Sinks

For the large community outdoor function **when hand or utensil washing is a must**. Shipped complete with removable fresh and waste water tanks. Now available in four convenient configurations.

Available in two (CVPHS-2) and three (CVPHS-3) compartment sinks. We also offer a one (CVPHS-1) compartment sink with a smaller cabinet for when space is at a premium.

NSF®

cvphs-1

Overall Dimension (W x D x H)	34.375 x 25.25 x 47.75"		
Actual Weight (LBS)	160	**Sink Compartments**	1
Water Pump	120 Volt	**Water Heater**	120 Volt

- Stainless steel contruction
- Lockable Access door
- 120 Volt water heater (9.5 litre) 2 Imp. Gallons
- All units are NSF approved
- Fully assembled & crated
- CSA, UL or equal approved
- 120 volt water pump
- Available with 2 (cvphs2) & 3 (cvphs3) compartments
- Available in a compact 1(cvphs4) cabinet version
- 2 x 20 litre (5 gallon) removable fresh water tanks
- 2 x 30 litre (7.5 gallon) removable waste water tanks
- Backsplash w/soap & towel dispensers
- 12 foot cord with standard wall plug
- City water and drain hookups

CROWN VERITY INC.

37 Adams Boulevard, Brantford, Ontario, Canada N3S 7V8

tel **519.751.1800** or 888.505.7240 fax 519.751.1802 e-mail info@crownverity.com web **www.crownverity.com**

Portable Sinks

Now available in four convenient models

MODEL	CVPHS-1	CVPHS-2	CVPHS-3	CVPHS-4
SINK BOWL SIZE (LxWxD)	14.0 x 12.0 x 6.0″	12.0 x 6.0 x 5.0″	12.0 x 6.0 x 5.0″	14.0 x 12.0 x 6.0″
SINKS	1	2	3	1
CABINET SIZE (WxDxH)	34.375 x 25.25 x 38.25″	34.375 x 25.25 x 38.25″	34.375 x 25.25 x 38.25″	24.0 x 25.25 x 38.25″
IDEAL TO WASH	hands	utensils	utensils	hands

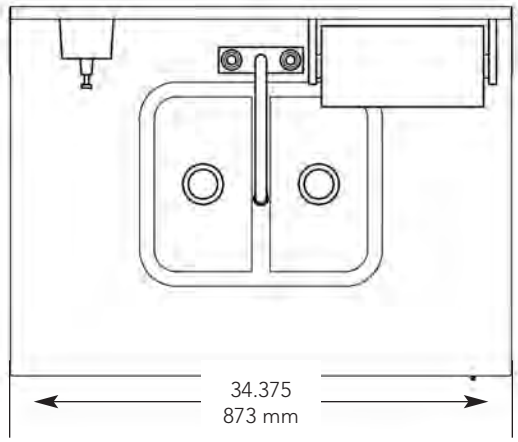

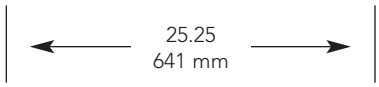

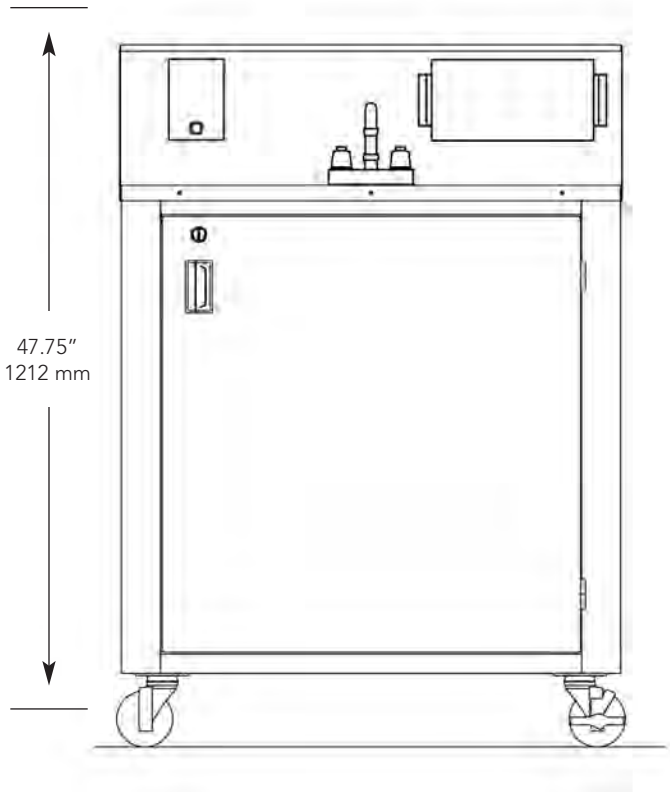

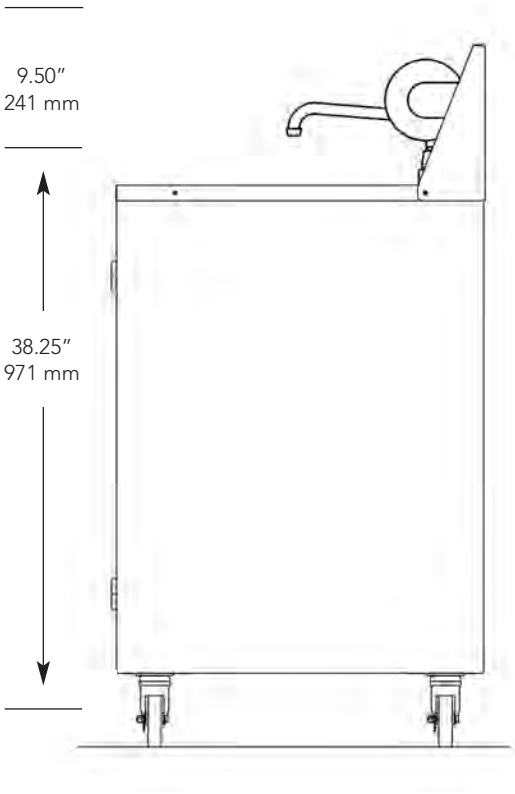

CROWN VERITY INC.

37 Adams Boulevard, Brantford, Ontario, Canada N3S 7V8

tel **519.751.1800** or 888.505.7240 fax 519.751.1802 e-mail info@crownverity.com web **www.crownverity.com**

SHELTER COVE HARBOUR COMPANY
PO Box 6004
Hilton Head Island, SC 29938

April 28, 2014

Angela Coleman
Greenwood Communities & Resorts
PO Box 5628
Hilton Head Island, SC 29938

RE: Mediterranean Harbour Bar & Grill

Dear Angela,

The Shelter Cove Harbour Company's ARB is in receipt of your application for the above reference project at your property.

The ARB met and approved the plans and signage as submitted.

Please notify the SCHC office at (843) 310-0431 or by email at jbetts@sheltercovehc.org upon completion so that final review for compliance can be conducted.

With Kindest Regards,

John P. Betts
Manager

Cc: Mr. Scott Foster, Chairman
SCHCARB Committee

Allied Management Group

P.O. Box 7431 • Hilton Head Island, SC • 29938
843-785-3278
Fax 843-785-3381

April 24, 2014

Angela Coleman
Commercial Property Manager
Palmetto Dunes
PO Box 5628
Hilton Head, SC 29938

Re: Mediterranean Harbour Bar and Grille

Dear Angela,

The Harbourside I and II board have approved the Mediterranean Harbour Bar & Grill's outside bar and signage as proposed.

Sincerely,

Stacy Kaeding
Property Manager

SK;kk

AMG
Allied Management Group

DESIGN TEAM/DRB COMMENT SHEET

The comments below are staff recommendations to the Design Review Board (DRB) and do NOT constitute DRB approval or denial.

PROJECT NAME: Mediterranean Harbour Bar & Grill – ALTERATION/ADDITION

DRB#: DR 140019

DATE: May 13, 2014

RECOMMENDATION: Approval ☐ Approval with Conditions ☒ Denial ☐

The applicant proposes to make alterations to a new restaurant within Shelter Cove Marina. The proposed outdoor bar is located under the existing awning between two existing columns and is in keeping with the colors and materials as the existing building as well as other improvements within Shelter Cove Marina. Additionally the applicant proposes to add a service window to serve guests directly from the kitchen area to the outdoor seating. A service window directly from the kitchen area could impede pedestrian travel through the corridor. Additionally a service window is in contrast to the existing storefront along the shops within the Marina. The project has been approved by the Shelter Cove Harbour Company's ARB as well as the Harbourside I and II board.

Town of Hilton Head Island

Community Development Department
One Town Center Court
Hilton Head Island, SC 29928
Phone: 843-341-4757 Fax: 843-842-8908
www.hiltonheadislandsc.gov

FOR OFFICIAL USE ONLY
Date Received: _____
Accepted by: _____
App. #: DR_____
Meeting Date: _____

Applicant/Agent Name: Don Baker, AIA Company: Square Feet Island Architects
Mailing Address: 10 E Garrison Place City: HHI State: SC Zip: 29928
Telephone: 290 6666 Fax: _____ E-mail: don@squarefeethhi.com
Project Name: **Marleys Island Grill** Project Address: 35 Office Park Road
Parcel Number [PIN]: R 5 5 2 0 1 4 0 0 0 0 9 3 4 0 0 0 0
Zoning District: _____ Overlay District(s): _____

DESIGN REVIEW BOARD (DR) SUBMITTAL REQUIREMENTS

Digital Submissions may be accepted via e-mail by calling 843-341-4757.

Project Category:

_____New Development – Conceptual
_____New Development – Final, indicate Project Number
✓ Alteration/Addition
_____Minor External Change

Submittal Requirements for ***All*** projects:

N/A Private Architectural Review Board (ARB) Notice of Action (if applicable): When a project is within the jurisdiction of an ARB, the applicant shall submit such ARB's written notice of action per LMO Section 16-3-1004. Submitting an application to the ARB to meet this requirement is the responsibility of the applicant.

✓ Filing Fee, New Development $175, Alterations/Additions $100, Minor External $50 cash or check made payable to the Town of Hilton Head Island.

Additional Submittal Requirements:

New Development – Conceptual Approval

_____A survey (1"=30' minimum scale) of property lines, existing topography and the location of trees meeting the tree protection regulations of Sec. 16-3-405, and if applicable, location of bordering streets, marshes and beaches.

_____A site analysis study to include specimen trees, access, significant topography, wetlands, buffers, setbacks, views, orientation and other site features that may influence design.

_____A draft written narrative describing the design intent of the project, its goals and objectives and how it reflects the site analysis results.

_____Context photographs of neighboring uses and architectural styles.

_____Conceptual site plan (to scale) showing proposed location of new structures, parking areas and landscaping.

_____Conceptual sketches of primary exterior elevations showing architectural character of the proposed development, materials, colors, shadow lines and landscaping.

Additional Submittal Requirements:

New Development – Final Approval

_____ A final written narrative describing how the project conforms with the conceptual approval and design review guidelines of Sec. 16-4-503.

_____ Final site development plan meeting the requirements of Sec. 16-3-303.F.

_____ Final site lighting and landscaping plans meeting the requirements of Sec. 16-3-304 and Sec. 16-3-305.

_____ Final floor plans and elevation drawings (1/8"=1'-0" minimum scale) showing exterior building materials and colors with architectural sections and details to adequately describe the project.

_____ A color board (11"x17" maximum) containing actual color samples of all exterior finishes, keyed to the elevations, and indicating the manufacturer's name and color designation.

_____ Any additional information requested by the Design Review Board at the time of concept approval, such as scale model or color renderings, that the Board finds necessary in order to act on a final application.

Additional Submittal Requirements:

Alterations/Additions *and* Minor External Changes

__✓__ A written narrative describing how project conforms to design guidelines of Section 16-4-503.

__✓__ Photographs and/or drawings of existing development.

__✓__ Drawings of the proposed development – 11"x 17".

__✓__ Material/color samples of existing and proposed changes - 8 ½"X 14" *Maximum*; Stating manufacturer and material name

Note: All application items must be received by the deadline date in order to be reviewed by the DRB per LMO Section 16-3-106.

A representative for each agenda item is strongly encouraged to attend the meeting.

Are there recorded private covenants and/or restrictions that are contrary to, conflict with, or prohibit the proposed request? If yes, a copy of the private covenants and/or restrictions must be submitted with this application. ☐ **YES** ☑ **NO**

To the best of my knowledge, the information on this application and all additional documentation is true, factual, and complete. I hereby agree to abide by all conditions of any approvals granted by the Town of Hilton Head Island. I understand that such conditions shall apply to the subject property only and are a right or obligation transferable by sale.

I further understand that in the event of a State of Emergency due to a Disaster, the review and approval times set forth in the Land Management Ordinance may be suspended.

Dan Bale

SIGNATURE

7 APRIL 2014

DATE

Narrative

Marleys

Marleys has been located at Park Plaza at the entrance to Sea Pines since 2002. The Ownership changed hands in 2008, and now the original owner and developer, SERG is resuming ownership.

Currently, the dining experience is changing on Hilton Head Island. More and more, customers are wanting to be and eat out of doors. And our weather can support this for much of the year.

There are 2 parts of this proposal.

First is the outside dining room. It will be situated at the northwest corner of the property. It will be located such that it encompass a live oak tree which is 36" in diameter, ie the deck and roof will be cut away to make the tree an integral element of the dining experience.

Second will be an outdoor service bar. This is to be located under an existing gable that faces the adjacent *Ice Cream Trader* and Office Park Road.

7 APRIL 2014 *rev 05 May*

The existing Marleys construction captures the southern charm with its mix of horizontal siding, shutters, standing seam metal roofing, exposed beams, all enhanced with generous wood trim. Marleys has a Caribbean flair, which includes a Caribbean influenced color palette which is experienced only when on-premises.

The proposed construction is a re-mix of these elements, specifically the metal roofing, exposed beams, and generous wood trim, all finished in the existing Sea Pines color palette. A little surprise of the Caribbean flair will be introduced with a low-slope (6|12) thatched roof over the service bar.

There are several large trees on the site. *NO TREE* will be removed for this project. As a matter of fact, the 36" L. Oak will remain and let through the deck and roof in the new dining area.

All new materials and colors are to match existing. There is only one new material bring introduced to the project, the thatch; its warmth will blend with the existing material vocabulary.

Submitted by

Don Baker, AIA
Square Feet Island Architects
290 6666
don@squafrefeethhi.com

Don,

The CARB reviewed your drawings and is ok with everything except the thatched roof. Please submit an alternative and I'll get it back in front of them.

Sincerely,

David Henderson
Director of Special Projects
Certified Wildlife Biologist
Community Services Associates, Inc.
175 Greenwood Drive
Hilton Head Island, SC 29928

From: Square Feet [mailto:don@squarefeethhi.com]
Sent: Tuesday, April 08, 2014 11:18 AM
To: wildlife@csaseapines.com
Cc: DPI HHI; DeTorre Bill
Subject: Marleys

20140408

David:

Attached to this email are drawings pertinent to the outdoor service improvements at Marleys…

DPI:
Please file under Marleys; make 2 sets of prints; Bind; Bill me.

Regards,
Don Baker, AIA

Award winning
SQUARE FEET
Architects & Planners

10 East Garrison Place
Hilton Head Island, SC 29928
c: 843 290 6666
e: don@squarefeethhi.com

VIEW FROM NORTH

METAL ROOF & RAFTER DETAILS

GABLE FACING GREENWOOD

N. ELEVATION FROM BIKE PATH

N.W. CORNER FROM BIKE PATH

N.W. CORNER FROM BIKE PATH

N.W. CORNER FROM BIKE PATH

LOCATION OF OUTDOOR BAR

CORNER OF OFFICE PARK & GREENWOOD

SQUARE FEET

Square Feet Island Architects
Don Baker, AIA
10 East Garrison Place
Hilton Head, SC 29928

o 843-363-3663
c 843-290-6666

don@squarefeethhi.com
HHI Bus Lic. # BLN0400739

PRELIMINARY INFORMATION
Not For Construction

Improvements at:

MARLEYS ISLAND GRILL
Park Plaza
35 Office Park Road
Hilton Head Island, SC 29928

Copyright 2014, by Square Feet

Note: All ideas, concepts, and designs described herein belong solely to the designer named on this page. These ideas, concepts, and designs are to be used only on this project. Any other use constitutes fraud, and the author of these drawings will prosecute any violators to the fullest extent of the law. Likewise the author of these drawings can not be held responsible for any unauthorized use of these drawings.

Project Number	Mar14
Issue Date	8 APRIL 2014
Issuance	HHI DRB

Revisions:

1. 8 APRIL 2014 HHI DRB
2.
3.
4.
5.

Sheet Title:
EXTERIOR PHOTOS

SHEET

PHOTOS

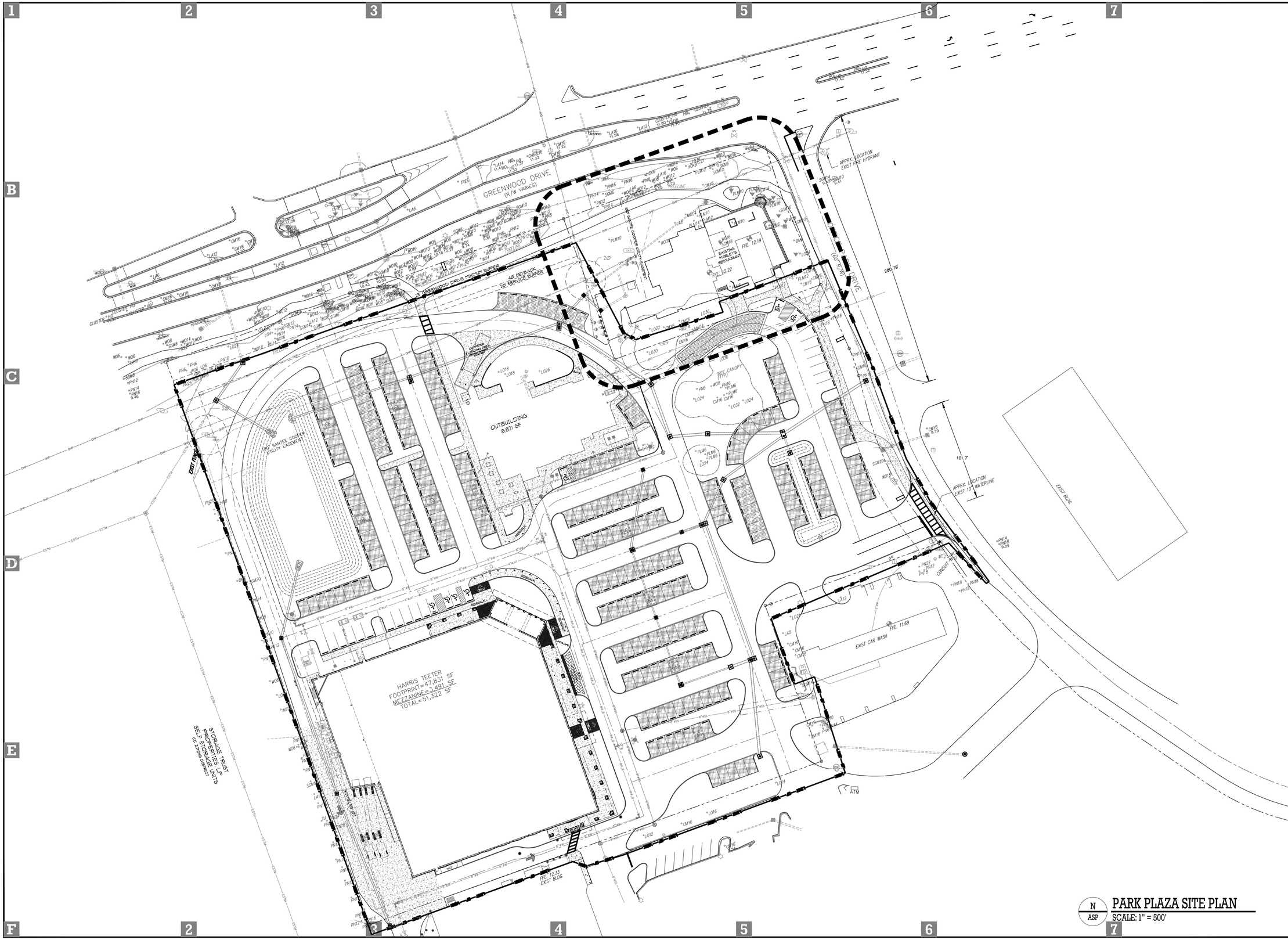

N
ASP

PARK PLAZA SITE PLAN

SCALE: 1" = 500'

SQUARE FEET

Square Feet Island Architects
Don Baker, AIA
10 East Garrison Place
Hilton Head, SC 29928

o 843-363-3663
c 843-290-6666

don@squarefeethhi.com
HHI Bus Lic. # BLN0400739

PRELIMINARY INFORMATION
Not For Construction

Improvements at:

MARLEYS ISLAND GRILL
Park Plaza
35 Office Park Road
Hilton Head Island, SC 29928

Copyright 2014, by Square Feet

Note: All ideas, concepts, and designs described herein belong solely to the designer named on this page. These ideas, concepts, and designs are to be used only on this project. Any other use constitutes fraud, and the author of these drawings will prosecute any violators to the fullest extent of the law. Likewise the author of these drawings can not be held responsible for any unauthorized use of these drawings.

Project Number	Mar14
Issue Date	8 APRIL 2014
Issuance	HHI DRB

Revisions:

1. 8 APRIL 2014 — HHI DRB
2.
3.
4.
5.

Sheet Title:
SITE PLAN:
PARK PLAZA SHOPPING CENTER

SHEET
ASP
PARK PLAZA

AREAS CALCULATIONS

ZONING DISTRICT	CC
TOTAL AREA OF SITE	32,323 SF
IMPERVIOUS AREA % ALLOWED BY LMO16.4.1606	65%
IMPERVIOUS AREA SF ALLOWED BY LMO16.4.1606	21,010 sf
ACTUAL SF CALCULATED	16,222 sf = 50%

THE ABOVE ARAES ARE INCLUSIVE OF ROOFS, CONC & PAVED WALKS, DRIVES, AND SLABS , AND STAIRS AND THE BIKE PATH.

TREE CALCULATIONS

NO TREE REMOVAL IS PROPOSED IN THE EXECUTION OF THIS PROJECT

PARKING CALCULATIONS

THE PROPOSED IMPROVEMENTS ADD 1,099 GSF TO THE PROJECT. ACCORDING TO HHI LMO 16-5-1209, THIS WOULD REQUIRE 3 PARKING SPACES. THESE SPACES ARE AVAILABLE FROM PARK PLAZA THRU AN EASEMENT.
A COPY OF THE 2010 RESTATED EASEMENT DOCUMENT IS BEING FORWARDED TO HHI TOWN HALL BY THE ARCHITECT.

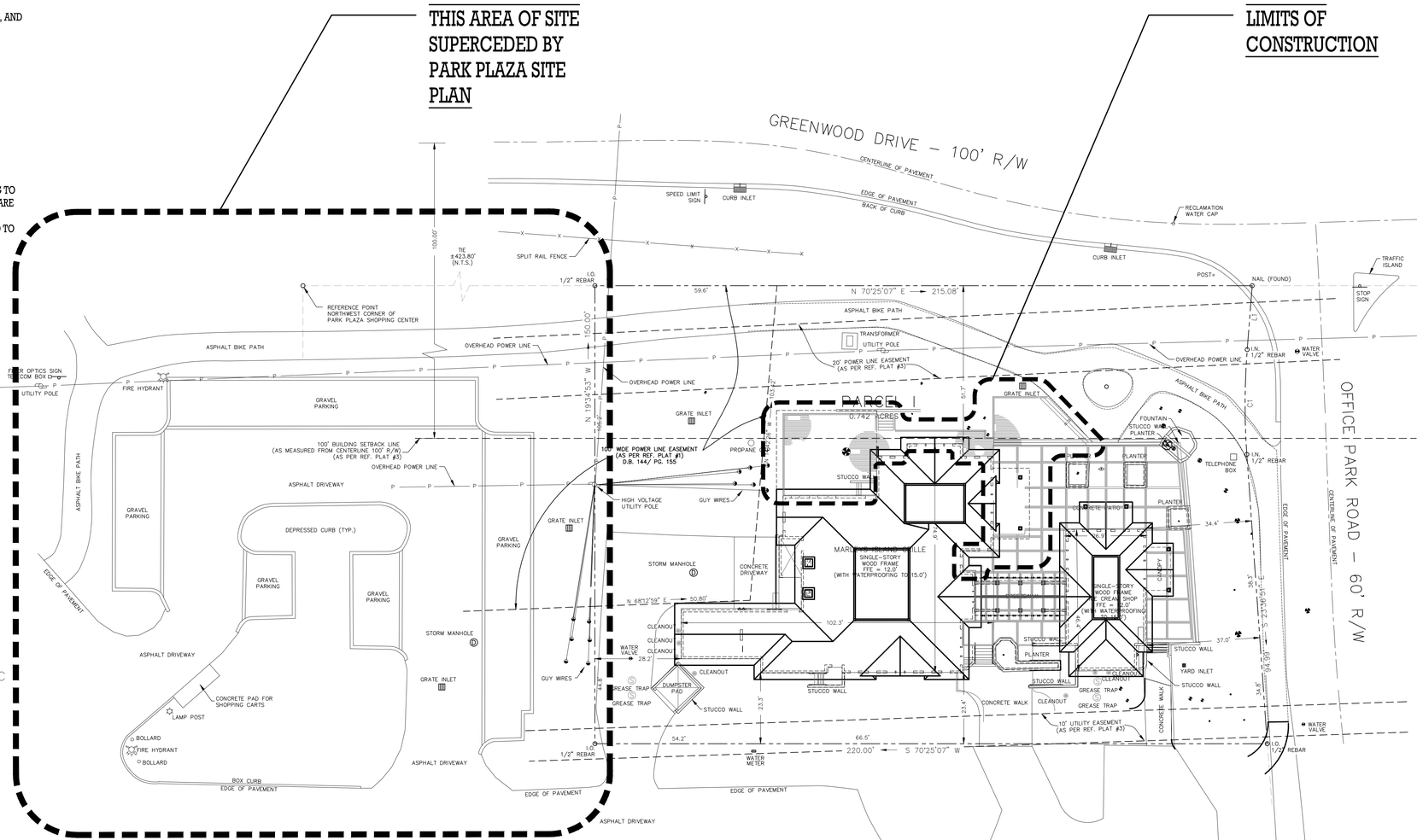

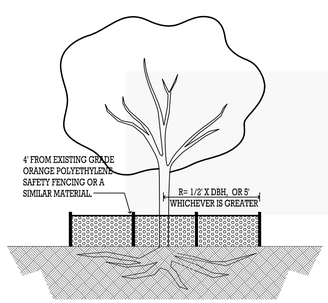

T ASP **TREE PROTECTION**
SCALE: N.T.S.

PREPARED FOR: BLACK MARLIN, LLC
ADDRESS: #35 OFFICE PARK ROAD
TAX PARCEL I.D. NO. R552-014-000-0934-0000

SOUTH CAROLINA SURVEYING CONSULTANTS, INC. No.C00835 CERTIFICATE OF AUTHORIZATION

SOUTH CAROLINA REGISTERED LAND SURVEYOR 11059 TERRY G. HATCHELL

GRAPHIC SCALE 0 20 40 80

ASBUILT SURVEY OF
0.742 ACRE, PARCEL I
OFFICE PARK ROAD
A PORTION OF
PHASE I
PARK PLAZA SHOPPING CENTER
HILTON HEAD ISLAND, BEAUFORT COUNTY, SOUTH CAROLINA

N/F HARRIS TEETER PROPERTIES LLC
PHASE I
TAX PARCEL I.D. NO. R552-014-000-0886-0000

SCALE: 1" = 20' DATE: 8/1/2002 JOB NO: 93244C-2

SURVEYING CONSULTANTS
39 Sheridan Park Circle, Suite 6, Bluffton, SC 29910
Telephone: (843) 815-3304 FAX: (843) 815-3305
CREW: [redacted]
CAD: [redacted]
COPYRIGHT © BY SURVEYING CONSULTANTS DISK NO: [redacted]

NORTH

N ASP **NEW WORK SITE PLAN**
SCALE: 1" = 20'

SQUARE FEET
Square Feet Island Architects
Don Baker, AIA
10 East Garrison Place
Hilton Head, SC 29928
o 843-363-3663
c 843-290-6666
don@squarefeethhi.com
HHI Bus Lic. # BLN0400739

PRELIMINARY INFORMATION
Not For Construction

Improvements at:
MARLEY'S ISLAND GRILL
Park Plaza
35 Office Park Road
Hilton Head Island, SC 29928

Copyright 2014, by Square Feet
Note: All ideas, concepts, and designs described herein belong solely to the designer named on this page. These ideas, concepts, and designs are to be used only on this project. Any other use constitutes fraud, and the author of these drawings will prosecute any violators to the fullest extent of the law. Likewise the author of these drawings can not be held responsible for any unauthorized use of these drawings.

Project Number Mar14
Issue Date 8 APRIL 2014
Issuance HHI DRB

Revisions:
1. 8 APRIL 2014 HHI DRB
2.
3.
4.
5.

Sheet Title:
ARCHITECTS SITE PLAN

SHEET
ASP
MARLEYS

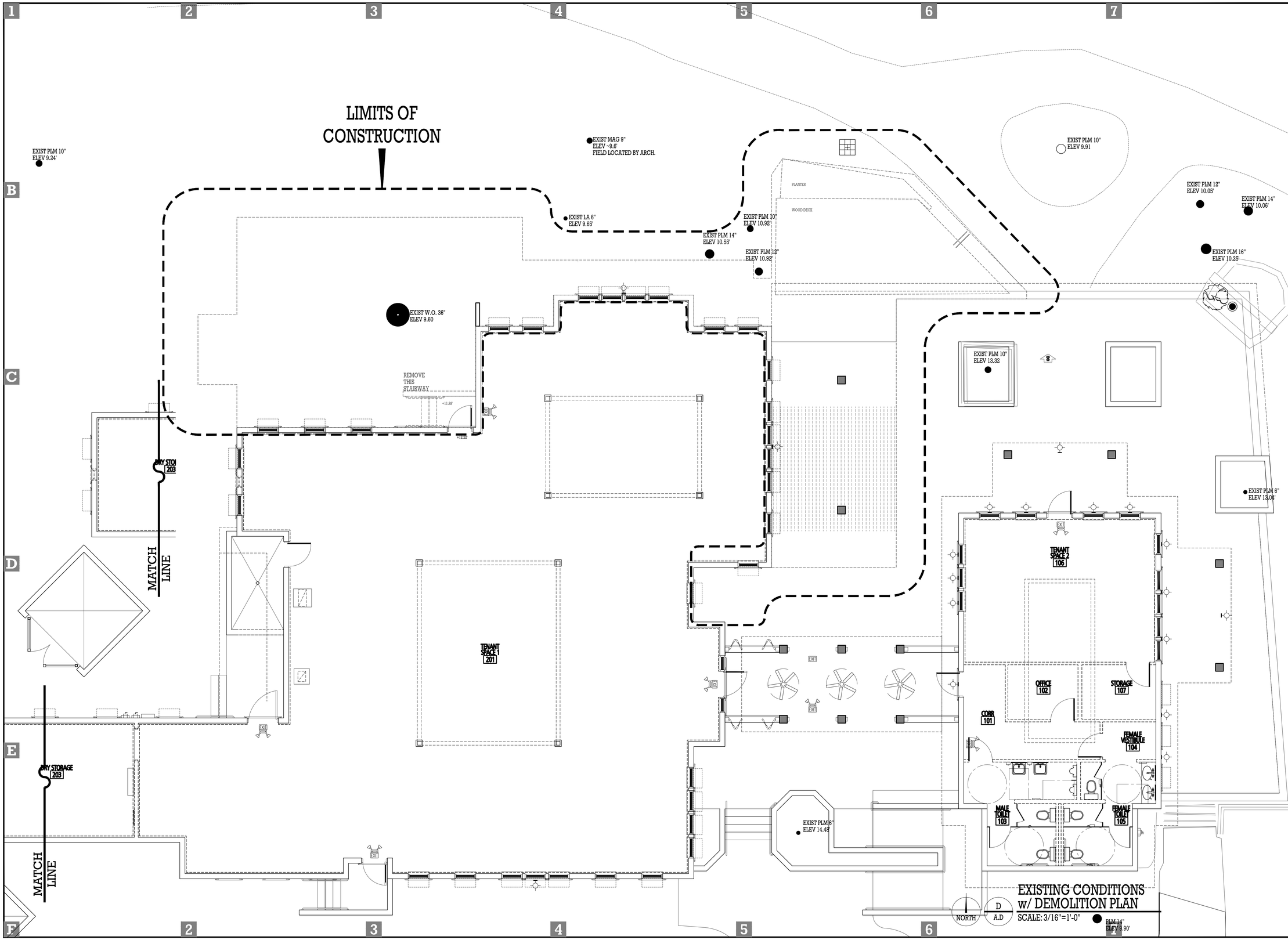

SQUARE FEET

Square Feet Island Architects
Don Baker, AIA
10 East Garrison Place
Hilton Head, SC 29928

o 843-363-3663
c 843-290-6666

don@squarefeethhi.com
HHI Bus Lic. # BLN0400739

PRELIMINARY INFORMATION
Not For Construction

Improvements at:

MARLEY'S ISLAND GRILL
Park Plaza
35 Office Park Road
Hilton Head Island, SC 29928

Copyright 2014, by Square Feet

Note: All ideas, concepts, and designs described herein belong solely to the designer named on this page. These ideas, concepts, and designs are to be used only on this project. Any other use constitutes fraud, and the author of these drawings will prosecute any violators to the fullest extent of the law. Likewise the author of these drawings can not be held responsible for any unauthorized use of these drawings.

Project Number	Mar14
Issue Date	8 APRIL 2014
Issuance	HHI DRB

Revisions:

1. 8 APRIL 2014 HHI DRB
2.
3.
4.
5.

Sheet Title:
EXISTING CONDITIONS & DEMOLITION PLAN

SHEET

A.1D

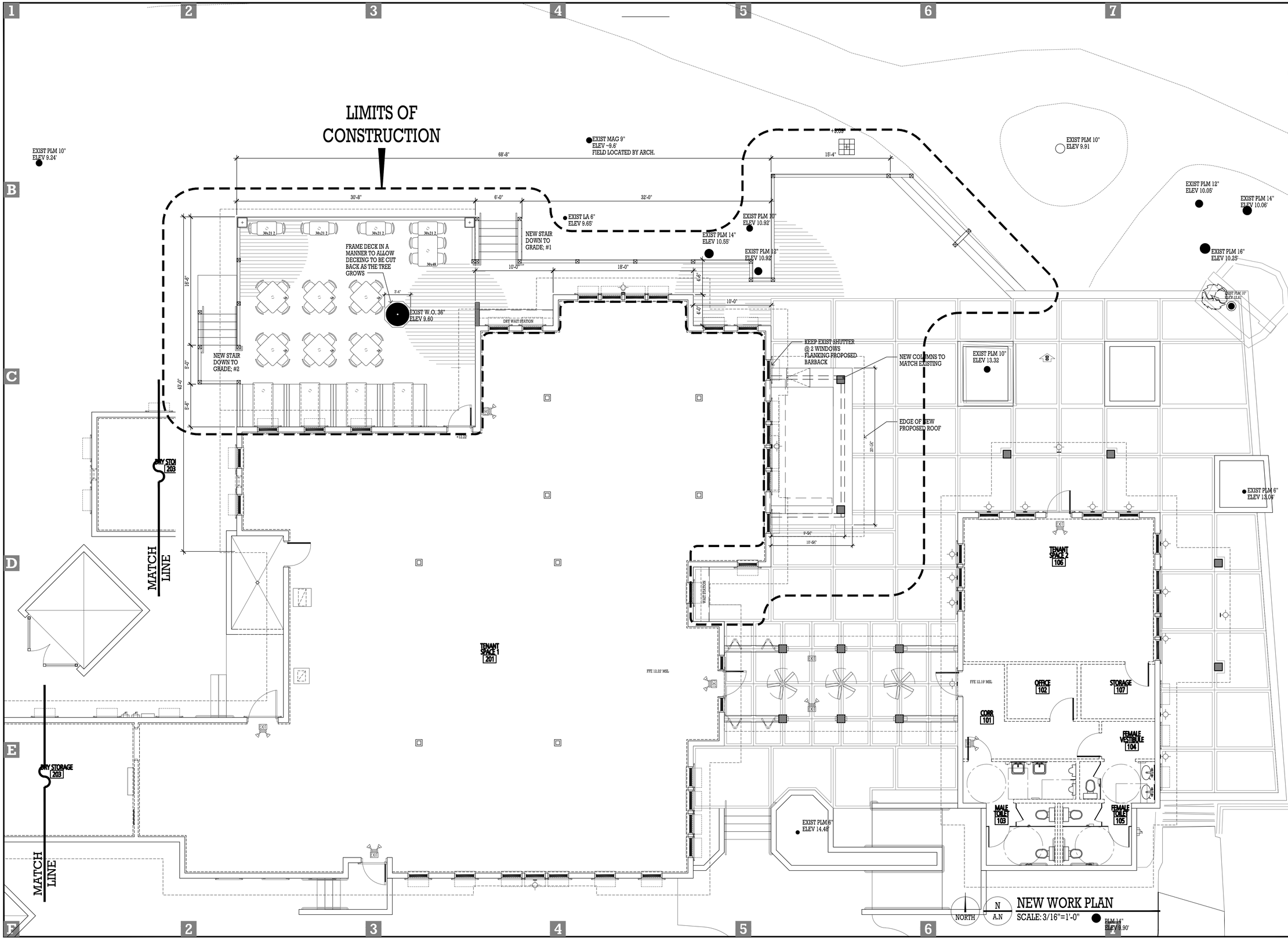

Square Feet Island Architects
Don Baker, AIA
10 East Garrison Place
Hilton Head, SC 29928
o 843-363-3663
c 843-290-6666

don@squarefeethhi.com
HHI Bus Lic. # BLN0400739

PRELIMINARY INFORMATION
Not For Construction

Improvements at:
MARLEYS ISLAND GRILL
Park Plaza
35 Office Park Road
Hilton Head Island, SC 29928

Copyright 2014, by Square Feet
Note: All ideas, concepts, and designs described herein belong solely to the designer named on this page. These ideas, concepts, and designs are to be used only on this project. Any other use constitutes fraud, and the author of these drawings will prosecute any violators to the fullest extent of the law. Likewise the author of these drawings can not be held responsible for any unauthorized use of these drawings.

Project Number	Mar14
Issue Date	8 APRIL 2014
Issuance	HHI DRB

Revisions:
1. 8 APRIL 2014 HHI DRB
2.
3.
4.
5.

Sheet Title:
NEW WORK PLAN

SHEET
A.1N

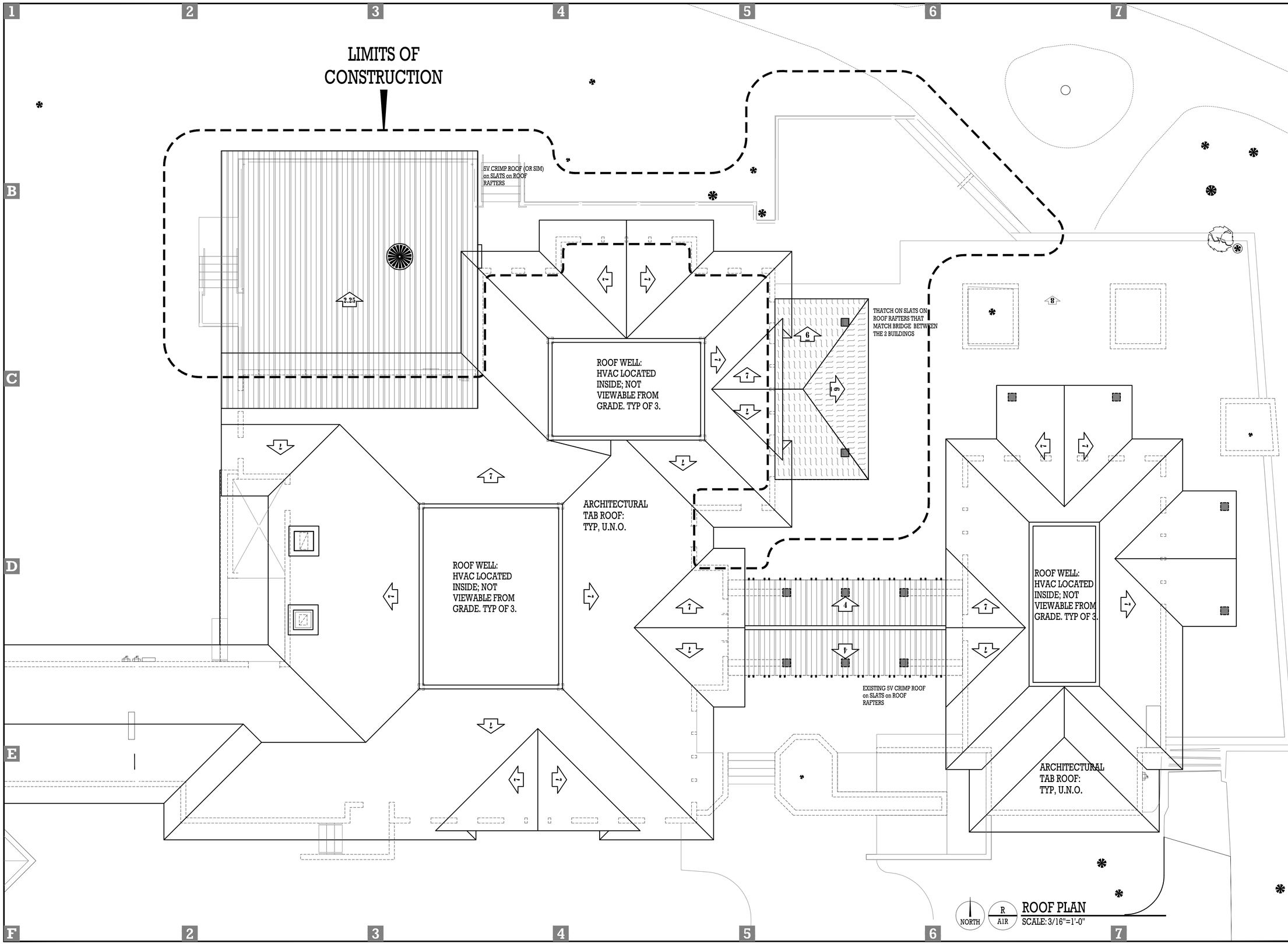

ROOF PLAN
SCALE: 3/16"=1'-0"

SQUARE FEET

Square Feet Island Architects
Don Baker, AIA
10 East Garrison Place
Hilton Head, SC 29928

o 843-363-3663
c 843-290-6666

don@squarefeethhi.com
HHI Bus Lic. # BLN0400739

PRELIMINARY INFORMATION
Not For Construction

Improvements at:
MARLEYS ISLAND GRILL
Park Plaza
35 Office Park Road
Hilton Head Island, SC 29928

Copyright 2014, by Square Feet
Note: All ideas, concepts, and designs described herein belong solely to the designer named on this page. These ideas, concepts, and designs are to be used only on this project. Any other use constitutes fraud, and the author of these drawings will prosecute any violators to the fullest extent of the law. Likewise the author of these drawings can not be held responsible for any unauthorized use of these drawings.

Project Number	Mar14
Issue Date	8 APRIL 2014
Issuance	HHI DRB

Revisions:
1. 8 APRIL 2014 HHI DRB
2.
3.
4.
5.

Sheet Title:
ROOF PLAN

SHEET
A.1R

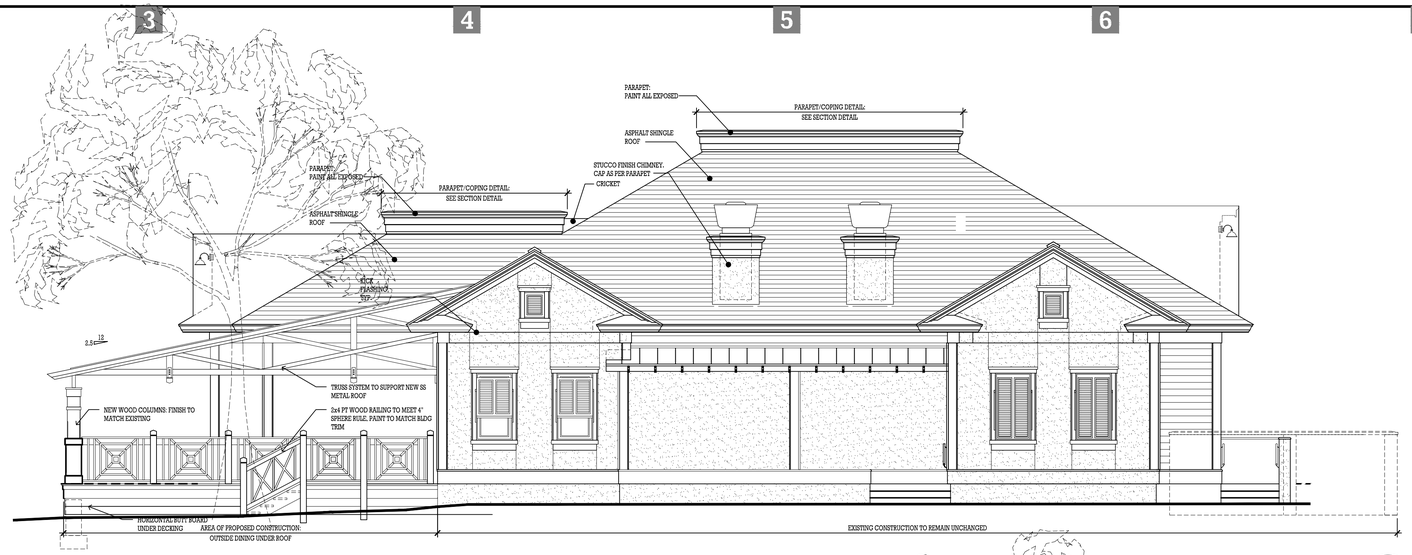

W A2 FACING SEA PINES
SCALE: 3/16"=1'-0"

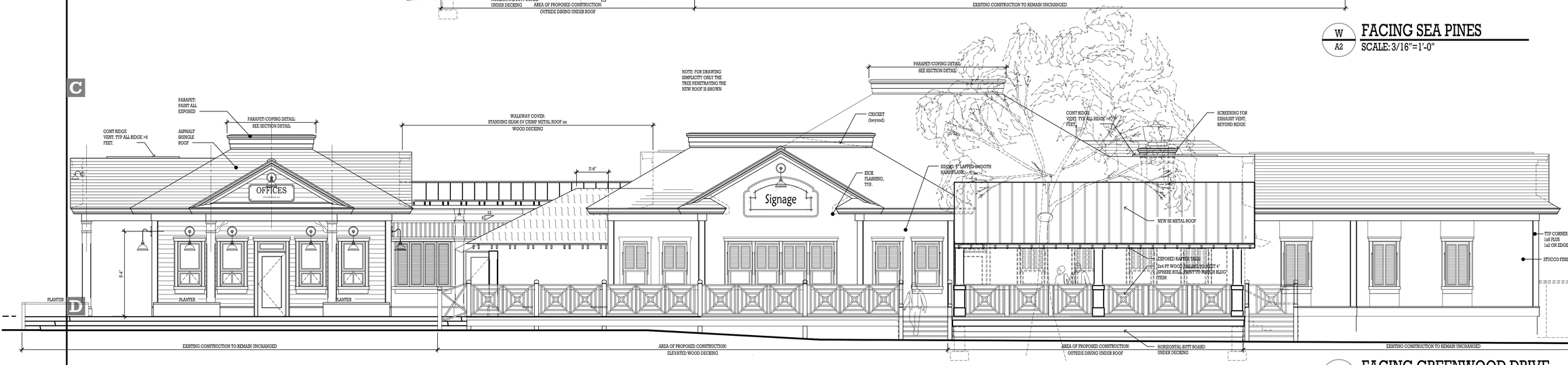

N A2 FACING GREENWOOD DRIVE
SCALE: 3/16"=1'-0"

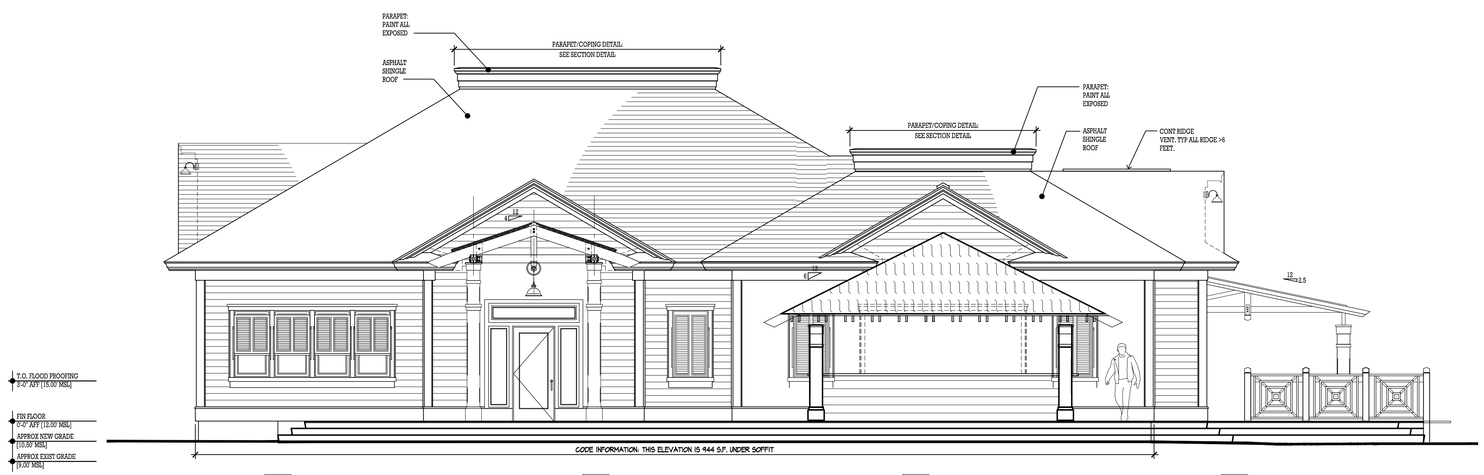

E A2 FACING OFFICE PARK RD
SCALE: 3/16"=1'-0"

SQUARE FEET

Square Feet Island Architects
Don Baker, AIA
10 East Garrison Place
Hilton Head, SC 29928

o 843-363-3663
c 843-290-6666

don@squarefeethhi.com
HHI Bus Lic. # BLN0400739

PRELIMINARY INFORMATION
Not For Construction

Improvements at:

MARLEY'S ISLAND GRILL
Park Plaza
35 Office Park Road
Hilton Head Island, SC 29928

Copyright 2014, by Square Feet

Note: All ideas, concepts, and designs described herein belong solely to the designer named on this page. These ideas, concepts, and designs are to be used only on this project. Any other use constitutes fraud, and the author of these drawings will prosecute any violators to the fullest extent of the law. Likewise the author of these drawings can not be held responsible for any unauthorized use of these drawings.

Project Number	Mar14
Issue Date	8 APRIL 2014
Issuance	HHI DRB

Revisions:
1. 8 APRIL 2014 HHI DRB
2.
3.
4.
5.

Sheet Title:
EXTERIOR ELEVATIONS

SHEET
A2

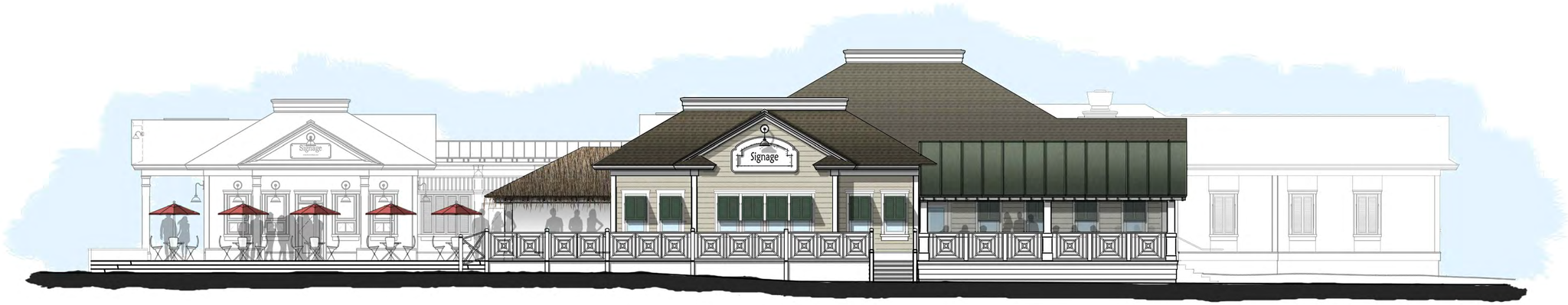

VIEW FROM GREENWOOD DRIVE

VIEW FROM OFFICE PARK ROAD

SQUARE FEET

Square Feet Island Architects
Don Baker, AIA
10 East Garrison Place
Hilton Head, SC 29928

o 843-363-3663
c 843-290-6666

don@squarefeethhi.com
HHI Bus Lic. # BLN0400739

PRELIMINARY INFORMATION
Not For Construction

Improvements at:

MARLEYS Island Grille

MARLEYS ISLAND GRILL
Park Plaza
35 Office Park Road
Hilton Head Island, SC 29928

Copyright 2014, by Square Feet

Note: All ideas, concepts, and designs described herein belong solely to the designer named on this page. These ideas, concepts, and designs are to be used only on this project. Any other use constitutes fraud, and the author of these drawings will prosecute any violators to the fullest extent of the law. Likewise the author of these drawings can not be held responsible for any unauthorized use of these drawings.

Project Number	Mar14
Issue Date	8 APRIL 2014
Issuance	HHI DRB

Revisions:

1. 8 APRIL 2014 HHI DRB
2.
3.
4.
5.

Sheet Title:
EXTERIOR RENDERINGS

SHEET
ARTIST'S RENDERINGS

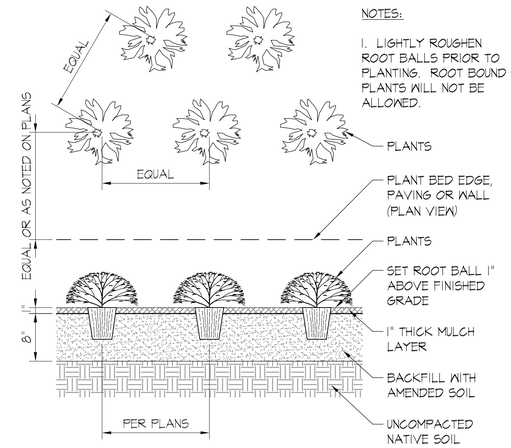

NOTES:

1. LIGHTLY ROUGHEN ROOT BALLS PRIOR TO PLANTING. ROOT BOUND PLANTS WILL NOT BE ALLOWED.

1 GROUNDCOVER PLANTING AND SPACING

1" = 1'-0" S-PL-SIN-04

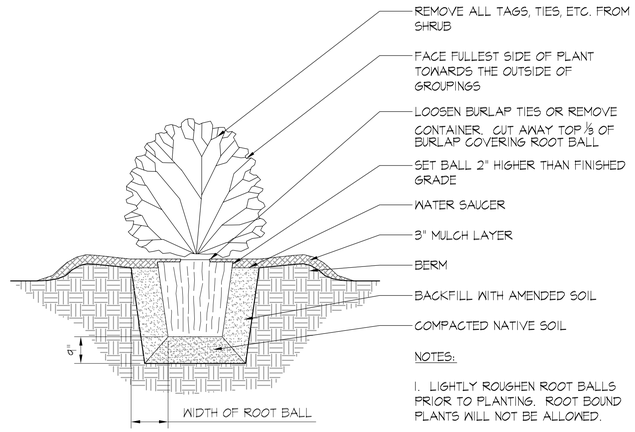

NOTES:

1. LIGHTLY ROUGHEN ROOT BALLS PRIOR TO PLANTING. ROOT BOUND PLANTS WILL NOT BE ALLOWED.

2 SHRUB PLANTING

1/2" = 1'-0" S-PL-SIN-02

PLANT SCHEDULE

SHRUBS	QTY	COMMON NAME	BOTANICAL NAME	CONT
CAM CAM	1	CAMELLIA	CAMELLIA X 'WINTER'S STAR'	7 GAL
AUC JAP	3	GOLD DUST AUCUBA	AUCUBA JAPONICA 'GOLD DUST'	7 GAL
FAT JAP	1	JAPANESE FATSIA	FATSIA JAPONICA	7 GAL
AZA IND	11	MRS. G.G. GERBING AZALEA	AZALEA INDICA 'MRS. G.G. GERBING'	7 GAL
ILE NEL	2	NELLIE STEVENS HOLLY	ILEX X 'NELLIE R STEVENS'	15 GAL
SER REP	4	SAW PALMETTO	SERENOA REPENS	3 GAL
MAH EUR	6	SOFT CARESS MAHONIA	MAHONIA EURYBRACTEATA 'SOFT CARESS'	3 GAL

SHRUB AREAS	CODE	QTY	COMMON NAME	BOTANICAL NAME	CONT	SPACING
	LIR AZT	31	AZTEC LILY TURF	LIRIOPE MUSCARI 'AZTEC'	1 GAL	12" o.c.
	LIR BIG	122	BIG BLUE LILYTURF	LIRIOPE MUSCARI 'BIG BLUE'	1 GAL	12" o.c.
	OPH JAP	23	MONDO GRASS	OPHIOPOGON JAPONICUS	1 GAL	12" o.c.

GROUND COVERS	CODE	QTY	COMMON NAME	BOTANICAL NAME	CONT	SPACING
	VIN MAJ	26	PERIWINKLE	VINCA MAJOR	1 GAL	18" o.c.
	JUN SAR	18	SARGENT JUNIPER	JUNIPERUS CHINENSIS SARGENTII	1 GAL	24" o.c.

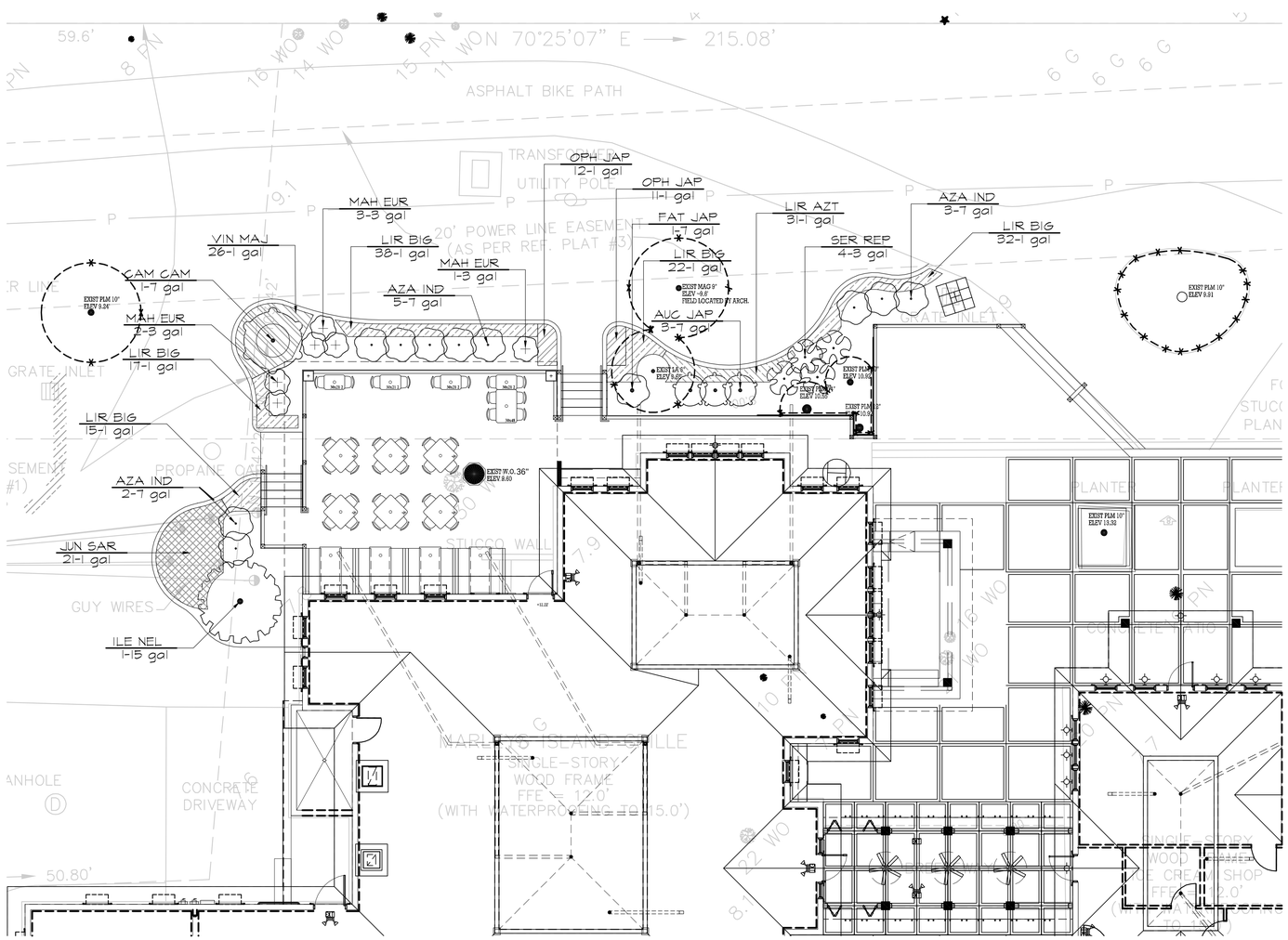

NOTES:

1. PER TOWN COMMENTS APPLICABLE TO LMO SEC. OR TOWN REGULATIONS - SHOW ON THE PLANS TREE PROTECTION FOR THOSE TREES LOCATED WITHIN 25' OF ANY PROPOSED GRADING, CONSTRUCTION, OR TREE REMOVAL THROUGH THE USE OF PHYSICAL BARRIERS, TO BE MAINTAINED UNTIL WORK IS COMPLETED. PROVIDE A SPEC FOR THE TREE PROTECTION FENCING ON THE SITE PLAN.

1.1. TREE PROTECTION FENCING AND SPECIFICATION ARE SHOWN ON THE PLANTING PLAN.

2. PER TOWN COMMENTS APPLICABLE TO SEC. 16-6-404.A - PROVIDE LANDSCAPING PLAN THAT INCLUDED MITIGATION FOR THE 16" GUM TREE REQUESTED TO BE REMOVED. THIS REPLACEMENT TREE MUST BE A CATEGORY II TREE AND MUST BE A MINIMUM OF 10' TALL AND HAVE A TRUNK DIAMETER OF AT LEAST 2" DBH, WHEN PLANTED.

2.1. ONE (1) RED MAPLE PER REQUIREMENTS IS SHOWN ON THE PLANTING PLAN.

3. ALL PLANTS SHALL BE FLORIDA NO. 1 OR BETTER.

4. LANDSCAPE CONTRACTOR SHALL REVIEW PLANS AND INDICATE ANY AVAILABILITY PROBLEMS AT TIME OF BID.

5. ALL PLANT LABELS, FLAGGING, AND TAGS SHALL BE REMOVED FROM EACH PLANT AFTER INSTALLATION.

6. ALL DEAD OR BROKEN BRANCHES SHALL BE REMOVED FROM EACH PLANT AFTER INSTALLATION.

7. LANDSCAPE CONTRACTOR SHALL MAINTAIN ALL PLANTINGS UNTIL ACCEPTANCE BY OWNER.

8. ALL TREES AND PALMS SHALL BE WARRANTED FOR A PERIOD OF 6 MONTHS. ALL SHRUBS SHALL BE WARRANTED FOR A PERIOD OF 90 DAYS. ALL SOD AND SEED SHALL BE WARRANTED FOR A PERIOD OF 30 DAYS. WARRANTY BEGINS AT TIME OF ACCEPTANCE OF PROJECT.

9. IT IS THE LANDSCAPE CONTRACTOR'S RESPONSIBILITY TO COORDINATE W/ AN IRRIGATION CONTRACTOR TO ENSURE ADEQUATE COVERAGE EXISTS.

10. LANDSCAPE CONTRACTOR SHALL INSTALL A BIO BARRIER FABRIC AROUND ALL PALMS WITHIN 4' OF PAVEMENT OR PLANTER WALLS.

11. LANDSCAPE CONTRACTOR SHALL BE LICENSED AND INSURED.

12. LANDSCAPE CONTRACTOR SHALL MAINTAIN SITE IN A CLEAN FASHION AND SHALL REMOVE ANY WASTE THAT IS CREATED.

13. LANDSCAPE CONTRACTOR SHALL HAVE A PRE-CONSTRUCTION REVIEW OF PLANS W/ OWNER PRIOR TO ORDERING PLANT MATERIAL, TO VERIFY PLANS ARE CURRENT, AND THAT NO CHANGES ARE NECESSARY.

14. LANDSCAPE CONTRACTOR SHALL ALSO SCHEDULE A WALK THRU TO ALLOW OWNER TO REVIEW FLAGGING AND PLACEMENT OF ALL PLANT MATERIAL PRIOR TO INSTALLATION.

15. THESE ABOVE MENTIONED MEETINGS ARE IMPORTANT TO THE QUALITY CONTROL OF THE PROJECT. LANDSCAPE CONTRACTOR UNDERSTANDS THAT IF WORK COMMENCES WITHOUT THESE MEETINGS, THAT THE OWNER HAVE THE ABILITY TO MAKE FIELD CHANGES TO THE PLANS AT THE LANDSCAPE CONTRACTOR'S EXPENSE.

16. INSTALL TREE PROTECTION FENCING PER TOWN OF HILTON HEAD APPROVAL REQUIREMENTS.

0 2 4 8 16 24
SCALE: 1"=1/8" = 1'-0"

NORTH

2014 copyright, by e. paul wal landscape architects, llc

CONSTRUCTION DOCUMENTS

MARLEYS ISLAND GRILLE

35 OFFICE PARK ROAD, HILTON HEAD ISLAND, SC 29928

e. paul wal landscape architects, llc
40 Muirfield Drive • Bluffton, SC 29909 • 843-540-2462
Consultants
SQUARE FEET ISLAND ARCHITECTS
10 East Garrison Place, Hilton Head Island, SC 29928

Revisions

LANDSCAPE PLAN

Scale:	1/8" = 1'-0"
Date of Issue:	05/05/2014
Project Number:	20140502
CAD File Name:	Marleys Landscape
Partner in Charge:	EPW
Project Director:	EPW

Sheet Number

L-01

DESIGN TEAM/DRB COMMENT SHEET

The comments below are staff recommendations to the Design Review Board (DRB) and do NOT constitute DRB approval or denial.

PROJECT NAME: Marley's Island Grill – ALTERATION/ADDITION DRB#: DR 140023

DATE: May 13, 2014

RECOMMENDATION: Approval ☐ Approval with Conditions ☒ Denial ☐

ARCHITECTURAL DESIGN

DESIGN GUIDE/LMO CRITERIA	Complies Yes	No	Not Applicable	Comments or Conditions
Structure is designed to be appropriate to the neighborhood	☒	☐	☐	
Promotes pedestrian scale and circulation	☒	☐	☐	
Design is unobtrusive and set into the natural environment	☐	☒	☐	Design of outdoor seating area impacts existing water oak. Consider working with Natural Resources to remove this tree and provide mitigation.
Utilizes natural materials and colors	☒	☐	☐	Exposed wood beams & trim
Avoids distinctive vernacular styles	☒	☐	☐	
Design is appropriate for its use	☐	☐	☐	Reconsider use of thatched roof as it does not meet the definition of Hilton Head Island character.
All facades are have equal design characteristics	☒	☐	☐	
Avoids monotonous planes or unrelieved repetition	☒	☐	☐	
Has a strong roof form with enough variety to provide visual interest	☒	☐	☐	
Minimum roof pitch of 6/12	☐	☒	☐	2.5/12
Overhangs are sufficient for the façade height.	☒	☐	☐	
Forms and details are sufficient to reduce the mass of the structure	☒	☐	☐	

Human scale is achieved by the use of proper proportions and architectural elements	☒	☐	☐	
Utilizes a variety of materials, textures and colors	☒	☒	☐	Stucco, brick, red cedar, hardie shake siding, glass, shingle roofing; mostly beige with some brick base and "Polo Blue" shutters
Incorporates wood or wood simulating materials	☒	☐	☐	
Windows are in proportion to the facade	☒	☐	☐	
Details are clean, simple and appropriate while avoiding excessive ornamentation	☒	☐	☐	
Utilities and equipment are concealed from view	☒	☐	☐	
Decorative lighting is limited and low wattage and adds to the visual character	☐	☐	☐	No lighting shown on building. Provide cut sheets for any new lighting. Provide cut sheets for landscape & site lighting.
Accessory elements are design to coordinate with the primary structure	☒	☐	☐	

LANDSCAPE DESIGN – Provide a landscape plan for review & approval by the DRB.

NATURAL RESOURCE PROTECTION

DESIGN GUIDE/LMO CRITERIA	Complies Yes	No	Not Applicable	Comments or Conditions
An effort has been made to preserve existing trees and under story plants	☒	☐	☐	
Supplemental and replacement trees meet LMO requirements for size, species and number	☐	☐	☐	
Wetlands if present are avoided and the required buffers are maintained	☐	☐	☒	
Sand dunes if present are not disturbed	☐	☐	☒	

MISC COMMENTS/QUESTIONS

Project requires a written Notice of Action from the Sea Pines Commercial ARB – ARB has reviewed & approved project with the exception of the thatched roof.
Any new signage or modifications to existing signage require approval of a sign permit application.

Town of Hilton Head Island

Community Development Department
One Town Center Court
Hilton Head Island, SC 29928
Phone: 843-341-4757 Fax: 843-842-8908
www.hiltonheadislandsc.gov

FOR OFFICIAL USE ONLY
Date Received: _____
Accepted by: _____
App. #: DR_____
Meeting Date: _____

Applicant/Agent Name: David R. Karlyk, PE Company: Carolina Engineering Consultants, Inc.
Mailing Address: PO Box 294 City: Beaufort State: SC Zip: 29901
Telephone: 843-322-0553 Fax: 843-322-0556 E-mail: davidk@carolinaengineering.com
Project Name: Lot 13 Capital Business Park Project Address: 25 Chastain Court, Capital Business Park
Parcel Number [PIN]: R 5 1 1 0 0 8 0 0 0 0 4 4 3 0 0 0 0
Zoning District: IL Overlay District(s): Corridor Overlay District

DESIGN REVIEW BOARD (DR) SUBMITTAL REQUIREMENTS

Digital Submissions may be accepted via e-mail by calling 843-341-4757.

Project Category:

✓ New Development – Conceptual
_____ New Development – Final, indicate Project Number
_____ Alteration/Addition
_____ Minor External Change

Submittal Requirements for *All* projects:

_____ Private Architectural Review Board (ARB) Notice of Action (if applicable): When a project is within the jurisdiction of an ARB, the applicant shall submit such ARB's written notice of action per LMO Section 16-3-1004. Submitting an application to the ARB to meet this requirement is the responsibility of the applicant.

✓ Filing Fee, New Development $175, Alterations/Additions $100, Minor External $50 cash or check made payable to the Town of Hilton Head Island.

Additional Submittal Requirements:

New Development – Conceptual Approval

✓ A survey (1"=30' minimum scale) of property lines, existing topography and the location of trees meeting the tree protection regulations of Sec. 16-3-405, and if applicable, location of bordering streets, marshes and beaches.

✓ A site analysis study to include specimen trees, access, significant topography, wetlands, buffers, setbacks, views, orientation and other site features that may influence design.

✓ A draft written narrative describing the design intent of the project, its goals and objectives and how it reflects the site analysis results.

✓ Context photographs of neighboring uses and architectural styles.

✓ Conceptual site plan (to scale) showing proposed location of new structures, parking areas and landscaping.

✓ Conceptual sketches of primary exterior elevations showing architectural character of the proposed development, materials, colors, shadow lines and landscaping.

Additional Submittal Requirements:

New Development – Final Approval

_____ A final written narrative describing how the project conforms with the conceptual approval and design review guidelines of Sec. 16-4-503.

_____ Final site development plan meeting the requirements of Sec. 16-3-303.F.

_____ Final site lighting and landscaping plans meeting the requirements of Sec. 16-3-304 and Sec. 16-3-305.

_____ Final floor plans and elevation drawings (1/8"=1'-0" minimum scale) showing exterior building materials and colors with architectural sections and details to adequately describe the project.

_____ A color board (11"x17" maximum) containing actual color samples of all exterior finishes, keyed to the elevations, and indicating the manufacturer's name and color designation.

_____ Any additional information requested by the Design Review Board at the time of concept approval, such as scale model or color renderings, that the Board finds necessary in order to act on a final application.

Additional Submittal Requirements:

Alterations/Additions *and* Minor External Changes

_____ A written narrative describing how project conforms to design guidelines of Section 16-4-503.

_____ Photographs and/or drawings of existing development.

_____ Drawings of the proposed development – 11"x 17".

_____ Material/color samples of existing and proposed changes - 8 ½"X 14" *Maximum*; Stating manufacturer and material name

Note: All application items must be received by the deadline date in order to be reviewed by the DRB per LMO Section 16-3-106.

A representative for each agenda item is strongly encouraged to attend the meeting.

Are there recorded private covenants and/or restrictions that are contrary to, conflict with, or prohibit the proposed request? If yes, a copy of the private covenants and/or restrictions must be submitted with this application. ☐**YES** ☑**NO**

To the best of my knowledge, the information on this application and all additional documentation is true, factual, and complete. I hereby agree to abide by all conditions of any approvals granted by the Town of Hilton Head Island. I understand that such conditions shall apply to the subject property only and are a right or obligation transferable by sale.

I further understand that in the event of a State of Emergency due to a Disaster, the review and approval times set forth in the Land Management Ordinance may be suspended.

SIGNATURE _____ DATE 4/1/14

CAROLINA ENGINEERING
CONSULTANTS, INC.

P.O. Box 294
Beaufort, SC 29901

(843) 322-0553
(843) 322-0556 Fax

April 1, 2014

Town of Hilton Head Island
One Town Center Court
Hilton Head Island, SC 29928

RE: Conceptual DRB Submittal
Lot 13 Capital Business Park
Job # 1687

To Whom It May Concern:

Please find attached our conceptual Design Review Board submittal package for the referenced project located at 25 Chastain Court on Lot 13 in the Capital Business Park. Enclosed are:

1. A copy of the original site survey
2. A copy of the site analysis study
3. A project narrative
4. Photographs of the neighboring uses and architectural styles
5. A copy of the conceptual site plan
6. A copy of the conceptual architectural elevations.

We are requesting to be placed on the April 22nd Design Review Board meeting agenda for review. If you have any questions or comments, please feel free to give me a call at our office.

Sincerely,

David R. Karlyk, PE
Carolina Engineering Consultants, Inc.

PROJECT NARRATIVE
FOR LOT 13 CAPITAL BUSINESS PARK
25 CHASTAIN COURT
TOWN OF HILTON HEAD
JOB NO. 1687

The proposed project will consist of constructing a 10,240 SF building with paved parking for A-1 Pool Service. The property is a 1.58 acre site located on 25 Chastain Court in the Capital Business Park. It is currently undeveloped and is zoned IL (light industrial).

We are proposing to install thirty (30) paved parking spaces due to the owner's requirements. His fleet of pool service trucks are parked on site each night and that many parking spaces are required for his employee's personal vehicles and his company trucks. The building will have over head doors on each side for his trucks to load and unload out of daily, so paving will be required up to the foundation on both sides of the building. There will not be any doors on the rear of the building. We have shown minimum drive aisle widths of 20' for two way traffic (where no parking abuts) and 24' where parking is shown.

The site has limited frontage on Chastain Court and the access was placed in a location that allowed the least impacts to an existing 44" Live Oak tree on-site, as well as protected a 21" and 23" live oaks along the Chastain Court frontage. An existing stormwater lagoon and 45" live oak at the rear of the property also factor in to how the site plan was developed. The current plan is a combination of the owner's requirements and the Town's standards.

Drainage for the project will be provided by the Capital Business Park master planned storm water detention system.

Electrical and telephone service will be provided by Palmetto Electric and Hargray respectively. Water and sewer service will be provided by the Hilton Head Public Service District. Fire protection and emergency services are provided by the Town of Hilton Head Fire Department and a dumpster will be provided on-site for solid waste disposal.

STUCCO WALLS
#909 VICTORIAN PERFECT
MASTER WALL

METAL ROOF
PANELS

METAL SIDING
PANELS

VULCAN
STEEL STRUCTURES, INC.

NEW BUILDING FOR:
AI POOL SERVICES
LOT 13
CAPITAL BUSINESS PARK
TOWN OF HILTON HEAD
BEAUFORT CO, SC

CAPITAL DRIVE

CURVE TABLE					
CURVE	LENGTH	RADIUS	CHORD	BEARING	DELTA
C1	106.80	75.00	98.00	S85°05'00"E	81°35'12"

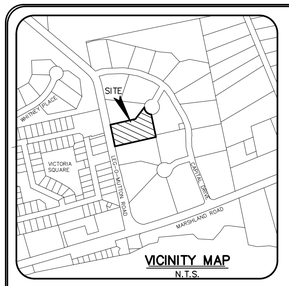

VICINITY MAP
N.T.S.

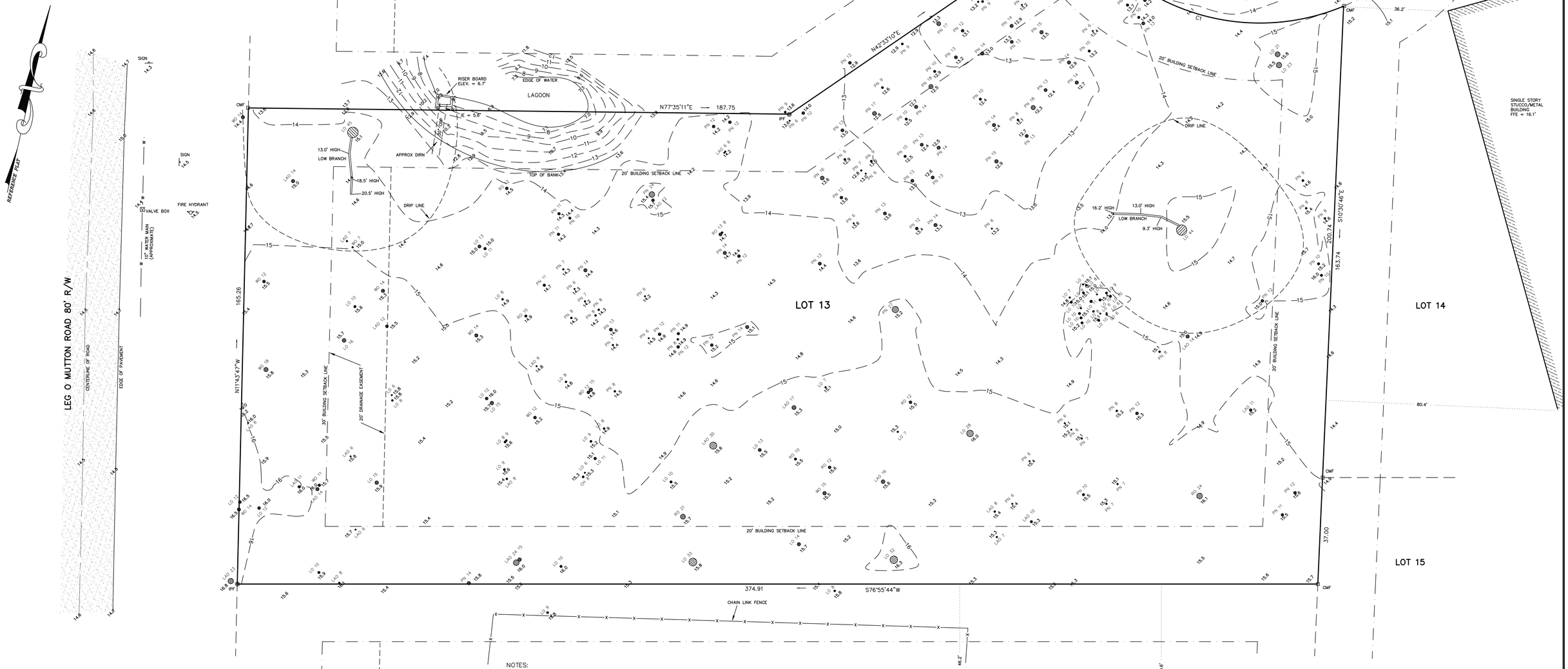

REFERENCE PLAT

1) A SUBDIVISION PLAT OF 19 LOTS AT THE A.J. TRUST SITE, A SECTION OF MARSHLAND ROAD & LEG O MUTTON ROAD AREA, HILTON HEAD ISLAND, BEAUFORT COUNTY, SOUTH CAROLINA.
DRAWN: 10/14/96
RECORDED IN BOOK 58 , PAGE 153
ROD. BEAUFORT COUNTY, SC
BY: JACK JONES S.C.R.L.S. # 13852

PROPERTY AREA = 1.58 AC. (68,624 S.F.)
ADDRESS: # 25 CHASTAIN COURT

DISTRICT: 511, MAP: 8 , PARCEL: 443

THIS PROPERTY LIES IN F.E.M.A. ZONE A7
BASE FLOOD ELEVATION = 14.0'
COMMUNITY NO. 450250, PANEL 0008D, DATED: 9/29/86

LEGEND & SYMBOLS:

TREE SIZES ARE INCHES IN DIAMETER

9.5	SPOT ELEVATION
9	CONTOUR
CMF	3" CONCRETE MONUMENT FOUND
IPF	1/2" IRON PIN FOUND
IPS	1/2" IRON SET WITH CAP
TBM	TEMPORARY BENCH MARK
IE	INVERT ELEVATION
FFE	FINISHED FLOOR ELEVATION
CPP	CORRUGATED PLASTIC PIPE
LO	LIVE OAK
LAO	LAUREL OAK
RO	RED OAK
PN	PINE
WO	WATER OAK
CH	WILD CHERRY
	ELECTRIC TRANSFORMER
	TELEPHONE SERVICE
	VALVE BOX
	FIRE HYDRANT
	SIGN

NOTES:
1) UNDERGROUND UTILITIES NOT LOCATED EXCEPT AS SHOWN.
2) SEA ISLAND LAND SURVEY, LLC. CERTIFIES TO THE BOUNDARY, TOPOGRAPHIC AND ASBUILT INFORMATION PROVIDED HEREON AS THE DATE OF THE SURVEY. THIS SURVEY MAY BE USED IN DIGITAL FORMAT AS A BASE FOR OTHERS AND ANY REVISIONS OR ADDITIONS MADE HEREAFTER IS NOT THE RESPONSIBILITY OF SEA ISLAND LAND SURVEY, LLC. A HARD COPY AVAILABLE FROM SEA ISLAND LAND SURVEY, LLC. WILL BE THE ONLY OFFICIAL DOCUMENT.
3) SUBJECT PROPERTY DOES NOT APPEAR TO BE AFFECTED BY THE BEACHFRONT SETBACK REQUIREMENTS OF THE S.C. BEACH PROTECTION ACT OF JULY 1, 1988.
4) HORIZONTAL DATUM IS LOCAL.
5) VERTICAL DATUM IS NGVD29.
6) CONTOUR INTERVAL IS 1'.
7) USE OF THIS PROPERTY MAY BE AFFECTED BY THE TERMS OF COVENANTS RELATING TO THIS PLANNED COMMERCIAL DEVELOPMENT.
8) BUILDING SETBACKS, TAKEN FROM REFERENCE PLAT, SHOULD BE VERIFIED BY THE LOCAL BUILDING AUTHORITY OR ARCHITECTURAL REVIEW BOARD.
9) THIS SURVEY HAS BEEN PREPARED WITHOUT BENEFIT OF A COMPLETE TITLE SEARCH AND IS SUBJECT TO EASEMENTS AND RESTRICTIONS OF RECORD.
10) THIS SURVEY DOES NOT CERTIFY TO THE EXISTENCE OR ABSENCE OF FRESHWATER WETLANDS.
11) IF IDENTIFICATION OF TREES IS CRITICAL TO DEVELOPMENT, AN ARBORIST SHOULD BE CONSULTED TO VERIFY SUCH TREE IDENTIFICATION.

I HEREBY STATE THAT TO THE BEST OF MY KNOWLEDGE, INFORMATION, AND BELIEF, THE SURVEY SHOWN HEREON WAS MADE IN ACCORDANCE WITH THE REQUIREMENTS OF THE MINIMUM STANDARDS MANUAL FOR THE PRACTICE OF LAND SURVEYING IN SOUTH CAROLINA, AND MEETS OR EXCEEDS THE REQUIREMENTS FOR A CLASS "A" SURVEY AS SPECIFIED THEREIN; ALSO THERE ARE NO VISIBLE ENCROACHMENTS OR PROJECTIONS OTHER THAN SHOWN.

SOUTH CAROLINA SEA ISLAND LAND SURVEY No.C02180 CERTIFICATE OF AUTHORIZATION

SOUTH CAROLINA PROFESSIONAL LAND SURVEYOR 25437 MARK R. RENEW

NOT VALID UNLESS EMBOSSED.

BOUNDARY, TREE AND TOPOGRAPHIC SURVEY OF:
LOT 13, CAPITAL BUSINESS PARK,
HILTON HEAD ISLAND,
BEAUFORT COUNTY, SOUTH CAROLINA

PREPARED FOR: ARNOLD BUILDING SYSTEMS

DATE : 2/03/14 SCALE : 1" = 16'

GRAPHIC SCALE 0 16 32 48

SILS Sea Island Land Survey, LLC.
4D Mathews Court, Hilton Head Island, SC 29926
Tel (843) 681-3248
Fax (843) 689-3871
E-mail: sils@sprynet.com

FILE No : 10071/2 DWG No. : 5-1543

COPYRIGHT © BY SEA ISLAND LAND SURVEY, LLC. CAD: BA, FLD: VRO

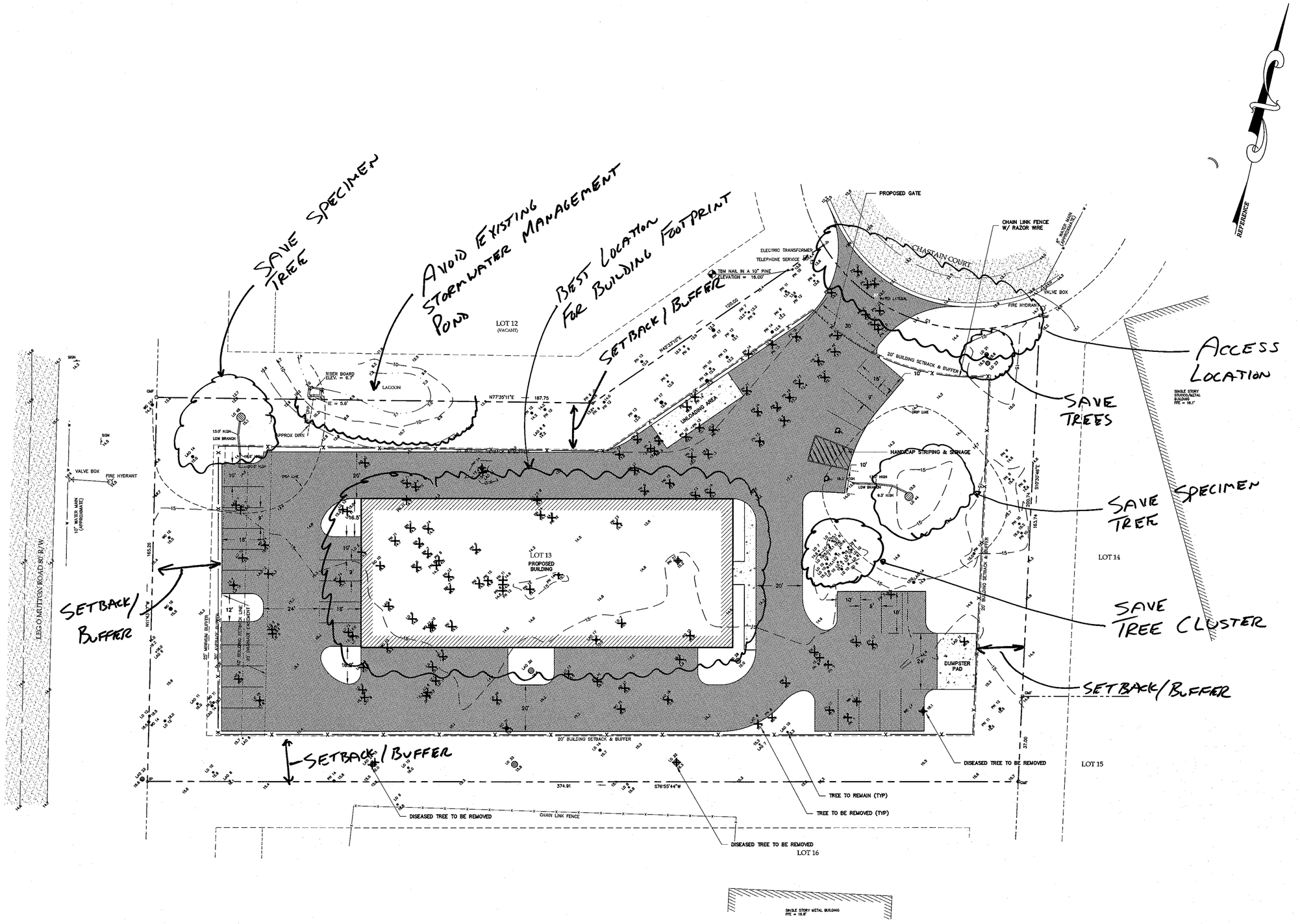

SITE ANALYSIS

SITE DEVELOPMENT TABLE	
TOTAL SITE AREA	1.575 AC
PERVIOUS AREA	0.737 AC
IMPERVIOUS AREA	0.838AC = 53%
TOTAL PARKING SPACES	30 SPACES
(INCLUDING 2 HANDICAP SPACES)	

GRAPHIC SCALE

20 0 10 20 40 80

(IN FEET)
1 inch = 20 ft.

SOUTH CAROLINA CAROLINA ENGINEERING CONSULTANTS INC. No. C00234 CERTIFICATE OF AUTHORIZATION

*ANY INFRINGEMENT MAY BE SUBJECT TO LEGAL ACTION. THE DESIGNS AND IDEAS PRESENTED IN THESE DRAWINGS ARE THE PROPERTY OF SAID ENGINEER. THE REPRODUCTION, COPY, OR USE OF THESE PLANS OR THE INFORMATION IS STRICTLY PROHIBITED WITHOUT THE WRITTEN CONSENT OF THE ENGINEER.

PLAN REVISIONS

NO.	DESCRIPTION	DATE
1	-	-
2	-	-
3	-	-
4	-	-
5	-	-
6	-	-
7	-	-
8	-	-

LOT 13 CAPITAL BUSINESS PARK
TOWN OF HILTON HEAD
BEAUFORT COUNTY, SC

CAROLINA ENGINEERING CONSULTANTS, INC.
PO BOX 294
BEAUFORT, SC 29901
843/322-0553
843/322-0556 (FAX)
WWW.CAROLINAENGINEERING.COM

PROJECT:	1687
DATE:	02/07/14
REVISED:	04/01/14
DRAWN BY:	TAB
ENGINEER:	DRK
SCALE:	1"=20'

SITE PLAN

1
OF 1

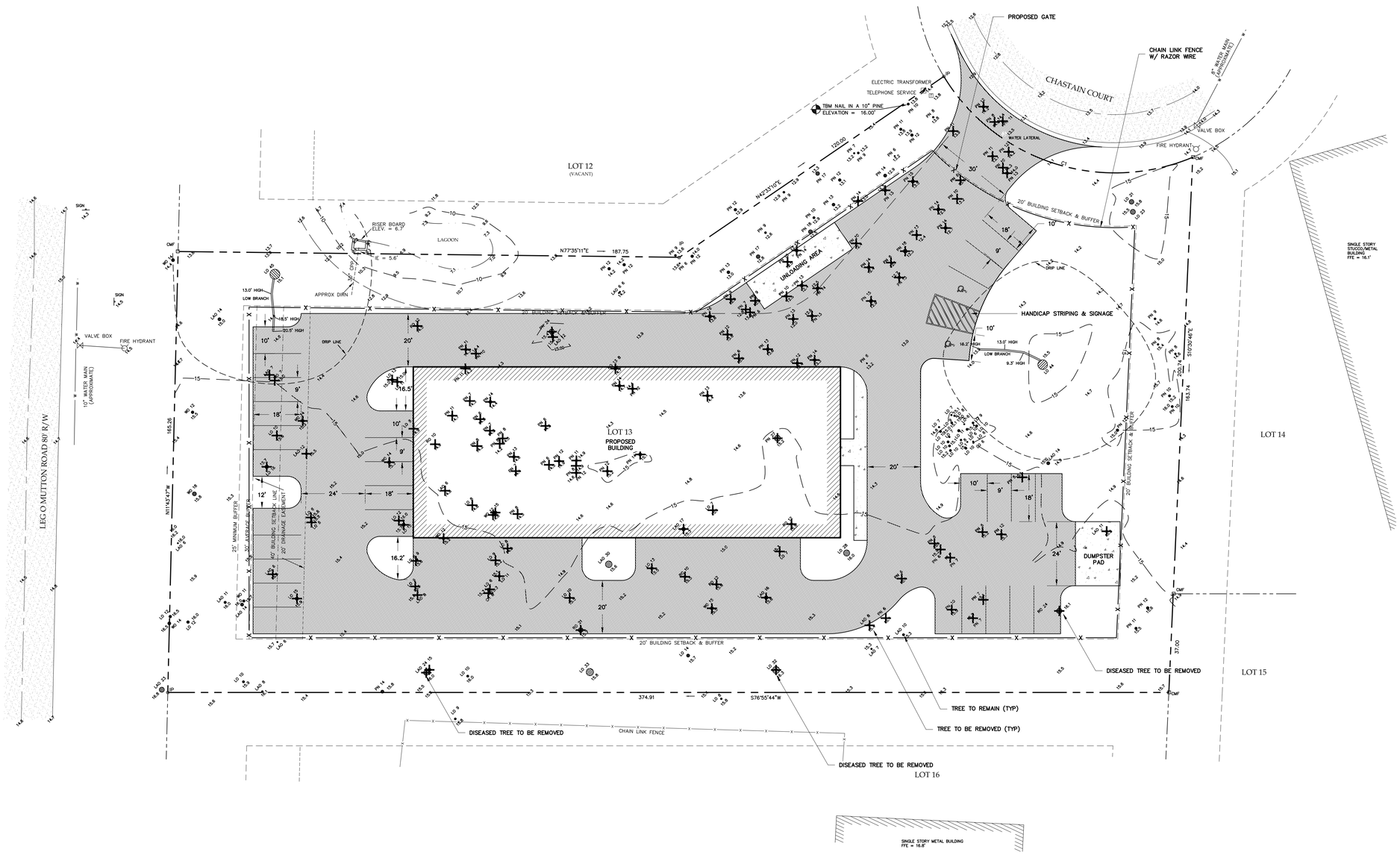

SITE DEVELOPMENT TABLE

TOTAL SITE AREA	1.575 AC
PERVIOUS AREA	0.737 AC
IMPERVIOUS AREA	0.838AC = 53%
TOTAL PARKING SPACES	30 SPACES
(INCLUDING 2 HANDICAP SPACES)	

GRAPHIC SCALE

20 0 10 20 40 80

(IN FEET)
1 inch = 20 ft.

*ANY INFRINGEMENT MAY BE SUBJECT TO LEGAL ACTION. THE DESIGNS AND IDEAS PRESENTED IN THESE DRAWINGS ARE THE PROPERTY OF CAROLINA ENGINEERING CONSULTANTS INC. THE REPRODUCTION, COPY, OR USE OF THESE PLANS OR THE INFORMATION IS STRICTLY PROHIBITED WITHOUT THE WRITTEN CONSENT OF THE ENGINEER.

SOUTH CAROLINA CAROLINA ENGINEERING CONSULTANTS INC. No. C02324 CERTIFICATE OF AUTHORIZATION

PLAN REVISIONS

NO.	DESCRIPTION	DATE
1	-	-
2	-	-
3	-	-
4	-	-
5	-	-
6	-	-
7	-	-
8	-	-

LOT 13 CAPITAL BUSINESS PARK
TOWN OF HILTON HEAD
BEAUFORT COUNTY, SC

CAROLINA ENGINEERING CONSULTANTS, INC.
PO BOX 294
BEAUFORT, SC 29901
WWW.CAROLINAENGINEERING.COM
843/322-0553
843/322-0556 (FAX)

PROJECT:	1687
DATE:	02/07/14
REVISED:	04/01/14
DRAWN BY:	TAB
ENGINEER:	DRK
SCALE:	1"=20'

SITE PLAN

1
OF 1

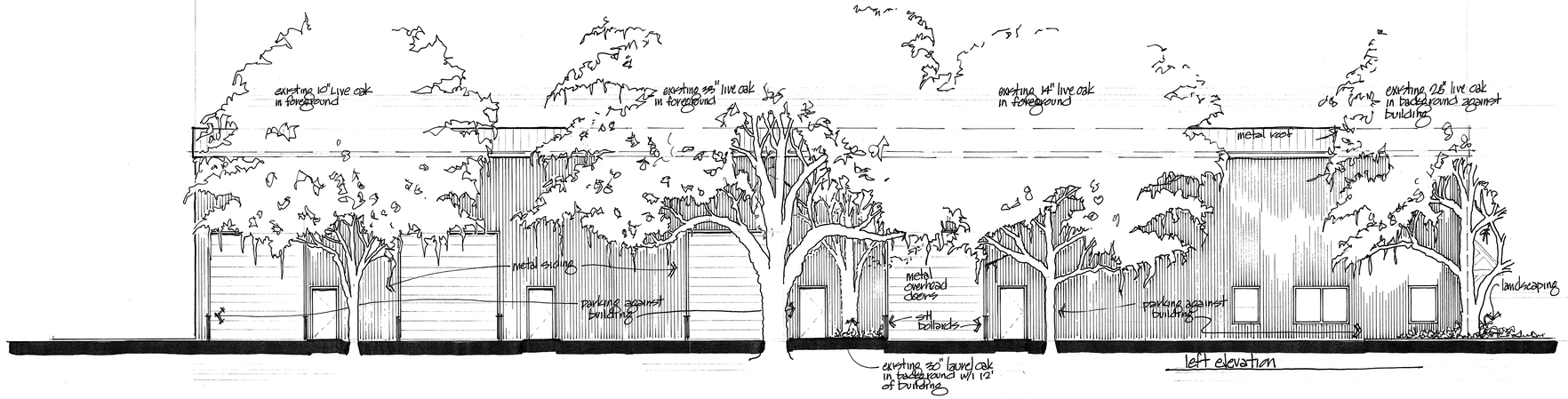

left elevation

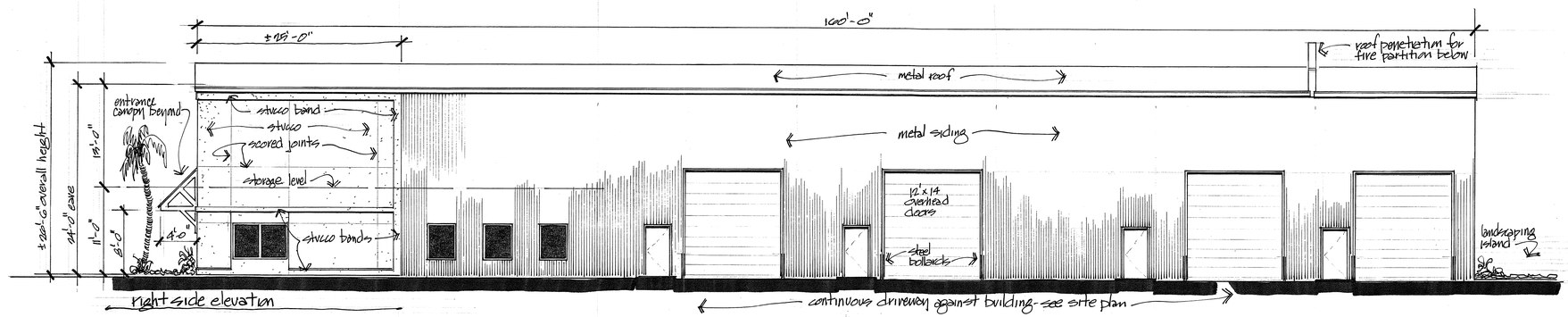

right side elevation

continuous driveway against building - see site plan

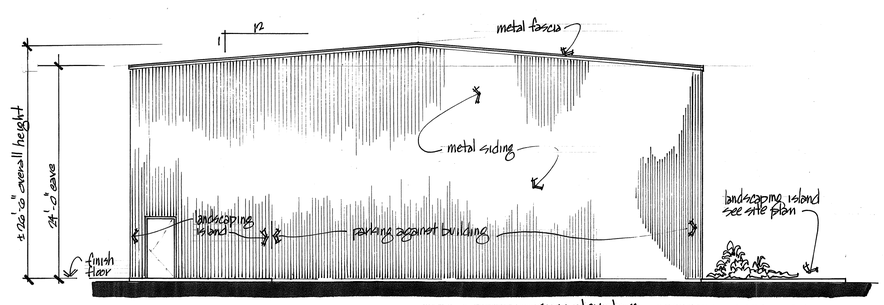

rear elevation

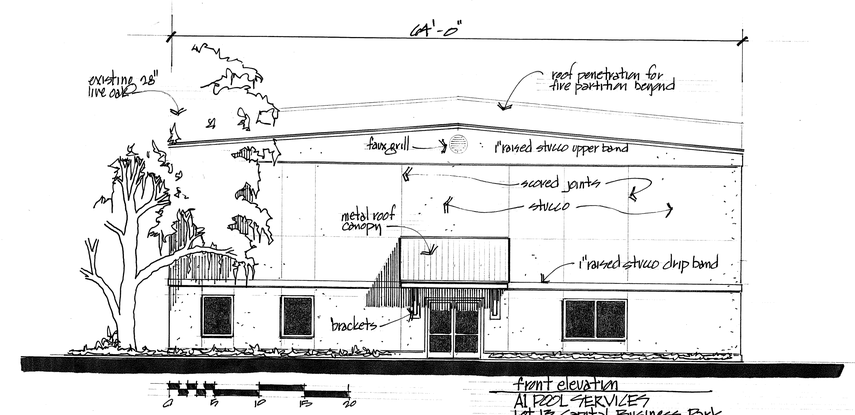

front elevation

AI POOL SERVICES
Lot 13 Coastal Business Park
Town of Hilton Head, Beaufort Co, SC

DESIGN TEAM/DRB COMMENT SHEET

The comments below are staff recommendations to the Design Review Board (DRB) and do NOT constitute DRB approval or denial.

PROJECT NAME: Lot 13 Capital Business Park – NEW DEVELOPMENT CONCEPTUAL

DRB#: DRB-000544-2014

DATE: May 13, 2014

RECOMMENDATION: Approval ☒ Approval with Conditions ☐ Denial ☐

ARCHITECTURAL DESIGN

DESIGN GUIDE/LMO CRITERIA	Complies Yes	No	Not Applicable	Comments or Conditions
Structure is designed to be appropriate to the neighborhood	☒	☐	☐	
Promotes pedestrian scale and circulation	☒	☐	☐	
Design is unobtrusive and set into the natural environment	☐	☒	☐	
Utilizes natural materials and colors	☒	☐	☐	Building includes stucco. Metal siding and metal roof are “Medium Bronze” and “Brownstone”.
Avoids distinctive vernacular styles	☒	☐	☐	
Design is appropriate for its use	☒	☐	☐	Entrance/office portion of the building are stucco with windows and a canopy. Storage portion of building is metal siding with roll-up doors.
All facades are have equal design characteristics	☐	☒	☐	Public side has most design characteristics. Consideration should be given to landscaping or additional detail for rear elevation which is adjacent to Leg O’ Mutton.
Avoids monotonous planes or unrelieved repetition	☒	☐	☐	Front, left, and right side elevations
Has a strong roof form with enough variety to provide visual interest	☒	☐	☐	

Minimum roof pitch of 6/12	☐	☒	☐	1/12 pitch
Overhangs are sufficient for the façade height.	☒	☐	☐	
Forms an details are sufficient to reduce the mass of the structure	☒	☐	☐	
Human scale is achieved by the use of proper proportions and architectural elements	☒	☐	☐	
Utilizes a variety of materials, textures and colors	☒	☐	☐	Stucco, metal siding, metal roof, glass, brackets
Incorporates wood or wood simulating materials	☒	☐	☐	Brackets, faux grill
Windows are in proportion to the facade	☒	☐	☐	
Details are clean, simple and appropriate while avoiding excessive ornamentation	☒	☐	☐	
Utilities and equipment are concealed from view	☐	☐	☒	
Decorative lighting is limited and low wattage and adds to the visual character	☐	☐	☐	None shown. Provide lighting plan and cut sheets for both site lighting and building façade lighting, if applicable, for Final Submittal.
Accessory elements are design to coordinate with the primary structure	☐	☒	☐	Chain link fence with razor wire is proposed as enclosure around entire property.

LANDSCAPE DESIGN – Site plan indicates existing trees to be removed & to remain as well as parking lot islands that can be used for landscaping, but a conceptual landscape plan has not been submitted. Submit a landscape plan, including plant schedule, as part of Final submittal.

NATURAL RESOURCE PROTECTION

DESIGN GUIDE/LMO CRITERIA	Complies Yes	No	Not Applicable	Comments or Conditions
An effort has been made to preserve existing trees and under story plants	☒	☐	☐	
Supplemental and replacement trees meet LMO requirements for size, species and number	☐	☐	☐	
Wetlands if present are avoided and the required buffers are maintained	☐	☐	☐	
Sand dunes if present are not disturbed	☐	☐	☒	

MISC COMMENTS/QUESTIONS

Town of Hilton Head Island

Community Development Department
One Town Center Court
Hilton Head Island, SC 29928
Phone: 843-341-4757 Fax: 843-842-8908
www.hiltonheadislandsc.gov

8:06 AM

FOR OFFICIAL USE ONLY
Date Received: 4.30.14
Accepted by: SARAH W.
App. #: DR
Meeting Date:

DRB-000542-2014

Applicant/Agent Name: James Atkins Company: Court Atkins Architects
Mailing Address: P.O. Box 3978 City: Bluffton State: SC Zip: 29910
Telephone: (843) 815-2557 Fax: E-mail: james.atkins@courtatkins.com
Project Name: Palmetto Dunes Admin. and Security Offices Project Address: Queens Folly Road
Parcel Number [PIN]: R 520-012-000-0346 & 347A-0000
Zoning District: Overlay District(s):

DESIGN REVIEW BOARD (DR) SUBMITTAL REQUIREMENTS

Digital Submissions may be accepted via e-mail by calling 843-341-4757.

Project Category:

____ New Development – Conceptual
✓ New Development – Final, indicate Project Number
____ Alteration/Addition
____ Minor External Change

Submittal Requirements for ***All*** projects:

✓ Private Architectural Review Board (ARB) Notice of Action (if applicable): When a project is within the jurisdiction of an ARB, the applicant shall submit such ARB's written notice of action per LMO Section 16-3-1004. Submitting an application to the ARB to meet this requirement is the responsibility of the applicant.

✓ Filing Fee, New Development $175, Alterations/Additions $100, Minor External $50 cash or check made payable to the Town of Hilton Head Island.

Additional Submittal Requirements:

New Development – Conceptual Approval

____ A survey (1"=30' minimum scale) of property lines, existing topography and the location of trees meeting the tree protection regulations of Sec. 16-3-405, and if applicable, location of bordering streets, marshes and beaches.

____ A site analysis study to include specimen trees, access, significant topography, wetlands, buffers, setbacks, views, orientation and other site features that may influence design.

____ A draft written narrative describing the design intent of the project, its goals and objectives and how it reflects the site analysis results.

____ Context photographs of neighboring uses and architectural styles.

____ Conceptual site plan (to scale) showing proposed location of new structures, parking areas and landscaping.

____ Conceptual sketches of primary exterior elevations showing architectural character of the proposed development, materials, colors, shadow lines and landscaping.

Additional Submittal Requirements:

New Development – Final Approval

✓ A final written narrative describing how the project conforms with the conceptual approval and design review guidelines of Sec. 16-4-503.

✓ Final site development plan meeting the requirements of Sec. 16-3-303.F.

✓ Final site lighting and landscaping plans meeting the requirements of Sec. 16-3-304 and Sec. 16-3-305.

✓ Final floor plans and elevation drawings (1/8"=1'-0" minimum scale) showing exterior building materials and colors with architectural sections and details to adequately describe the project.

✓ A color board (11"x17" maximum) containing actual color samples of all exterior finishes, keyed to the elevations, and indicating the manufacturer's name and color designation.

✓ Any additional information requested by the Design Review Board at the time of concept approval, such as scale model or color renderings, that the Board finds necessary in order to act on a final application.

Additional Submittal Requirements:

Alterations/Additions *and* Minor External Changes

_____ A written narrative describing how project conforms to design guidelines of Section 16-4-503.

_____ Photographs and/or drawings of existing development.

_____ Drawings of the proposed development – 11"x 17".

_____ Material/color samples of existing and proposed changes - 8 ½"X 14" *Maximum*; Stating manufacturer and material name

Note: All application items must be received by the deadline date in order to be reviewed by the DRB per LMO Section 16-3-106.

A representative for each agenda item is strongly encouraged to attend the meeting.

Are there recorded private covenants and/or restrictions that are contrary to, conflict with, or prohibit the proposed request? If yes, a copy of the private covenants and/or restrictions must be submitted with this application. ☐**YES** ☑**NO**

To the best of my knowledge, the information on this application and all additional documentation is true, factual, and complete. I hereby agree to abide by all conditions of any approvals granted by the Town of Hilton Head Island. I understand that such conditions shall apply to the subject property only and are a right or obligation transferable by sale.

I further understand that in the event of a State of Emergency due to a Disaster, the review and approval times set forth in the Land Management Ordinance may be suspended.

SIGNATURE _____ DATE 04/29/14

DRB Narrative

Final Submittal - DRB Project Number: DR 140021

Project Name:

Palmetto Dunes Admin. And Security Offices

Location: Queen Folly Road, Hilton Head Island

Parcels: R520-012-000-0346 & 347A-0000

DRB Project Number: DR 140021

Project Contacts:

Owner's Representative:
Ben Brown – Principal Planner & Project Manager
Palmetto Dunes Property Owners Association
Hilton Head Island, SC. 29926
843-785-1109

Architect:
Court Atkins Architects, Inc.
P.O. Box 3978
Bluffton, SC 29910
843-815-2557

Civil Engineer:
Ward Edwards Engineering
P.O. Box 381
Bluffton, SC 29910
843-837-5250

Landscape:
Witmer-Jones-Keefer. Ltd.
P.O. Box 3036
Bluffton, SC 29910
843-757-7411

Project Description:

The project will be a demolition of the existing Fire Station #6 located on Queen Folly Road and construction of a new 7,600 sq. ft. Palmetto Dunes Administration and Security Office building. The site will provide Palmetto Dunes POA a presence at the entry / gateway to Palmetto Dunes, while bring bringing administrative, security, and community pass services together in one centralized facility. After studying updates to the existing fire station building, Palmetto Dunes concluded that renovating the existing structure was not feasible, but that utilizing a redevelopment floating zone would allow the site to function efficiently for their needs. The new building design consists of four corner elements with a combination of asphalt shingle hip roofs and standing seam metal shed roofs, stucco, Hardie shake siding and brick veneer wainscot. The west elevation facing the entry road to the building will have a wood trellis to create some depth and shade and shadow on that elevation as you approach the building.

The following comments from the Conceptual Design Review that have been addressed:

1. Window shutter color has been changed to SW 7055 Enduring Bronze (see color board)
2. Roofing material for the 2:12 shed roof at each corner of the building has been changed to standing seam metal roofing.
3. Wood trellis on west elevation has been coordinated with the landscaping plan.

Impact on Site:

Reference the Landscape Development Plan sheet L1 for impacts on site.

Other Review Board Approvals:

This project was submitted to The Palmetto Dunes Architectural Review Board and was approved on January 13, 2014. (See attached letter)

PALMETTO DUNES
PROPERTY OWNERS ASSOCIATION
A RESIDENTIAL RESORT COMMUNITY

January 13, 2014

James Atkins Via Email
Court Atkins Architects
P.O. Box 3978
Bluffton, SC 29910

Dear Mr. Atkins,

The Palmetto Dunes Architectural Review Board reviewed and approved the new construction plans for the POA office space to be located at the site of the current fire station on Queens Folly Road. It is understood that the existing fire station will be demolished and the new office space will be constructed in its place.

Please provide a colors and materials board. The building permit will be issued once the colors are finalized and the town permit is obtained. A refundable compliance deposit will not be required for this project.

Sincerely,

HS

Heidi Stenhammer
ARB Administrator

CC: Andrew Schumacher, PDPOA General Manager

P.O. Box 7974 Hilton Head, SC 29938 Tel: (843) 785-1109 Fax: (843) 785-3589 www.pdpoa.org

SHINGLE ROOFING
GAF TIMBERLINE (WEATHERED WOOD)

METAL ROOFING
MCELROY METAL (PATRICIAN BRONZE)

FASCIA/SOFFIT/TRIM
HARDIE TRIM CUSTOM MATCH TO DRYVIT (PRAIRIE CLAY)

HARDIE SHAKE SIDING
CUSTOM MATCH TO DRYVIT (PRAIRIE CLAY)

STUCCO VENEER
DRYVIT (PRAIRIE CLAY)

STUCCO TRIM
CUSTOM MATCH TO JELD WEN (DESERT SAND)

WINDOWS / DOORS
JELD WEN (DESERT SAND)

BRICK WAINSCOT
CHEROKEE (MOSSTOWN)

SHUTTERS
SHERWIN WILLIAMS SW 7055 (ENDURING BRONZE)

WOOD BRACKETS & TRELLIS
RED CEDAR

PALMETTO DUNES
ADMIN. AND SECURITY OFFICES
QUEENFOLLY ROAD, HILTON HEAD ISLAND, SC

PROPOSED EXTERIOR MATERIALS & COLORS

APRIL 29, 2014

COURT ATKINS
ARCHITECTS
P.O. B 78 Bluffton, SC 299
P: 843 557 F: 843.815.25

NATIONAL BUILDER SUPPLY

Kichler Tolland 49463BRZ Brushed Bronze

KICHLER

Part of the *Kichler Tolland* collection

Manufacturer SKU: **49463BRZ**

Choose Your Finish:

Brushed Bronze ·

MSRP: $387.00

Up to a 33% savings off MSRP

Available for order

Usually ships in 10 - 15 business days.

Kichler Tolland Collection Outdoor Wall 3 Light

Kichler Lighting offers a distinctive array of lighting solutions that reflect your individual personality, tastes and plans functionality and transform your spaces into stunning, inspiring settings. Lighting that energizes, as well as enhances collection exudes elegance, pairing intricate detail with graceful curves. The Brushed Bronze finish and paneled comp layered light. This design blends form and function to capture a poised stateliness.

Features

- Lamp Included: No
- Height: 21.5"
- Width: 9.5"
- Glass Description: Vertical Rain
- Safety Rated: Wet
- Socket Wire: 105
- Socket Base: Candelabra

Specifications

Bulb 1 Base Type
Bulb 1 Type
Glass Type
Max Watts Bulb 1
Wall Control Included
Collections
Number of Bulbs
Width in Inches
Height in Inches

THIS DOCUMENT AND ALL REPRODUCIBLE COPIES OF THIS DOCUMENT ARE THE PROPERTY OF WARD EDWARDS, INC. REPRODUCTION OR ALTERATIONS OF THIS DRAWING WITHOUT THE WRITTEN CONSENT OF WARD EDWARDS, INC. IS NOT PERMITTED.

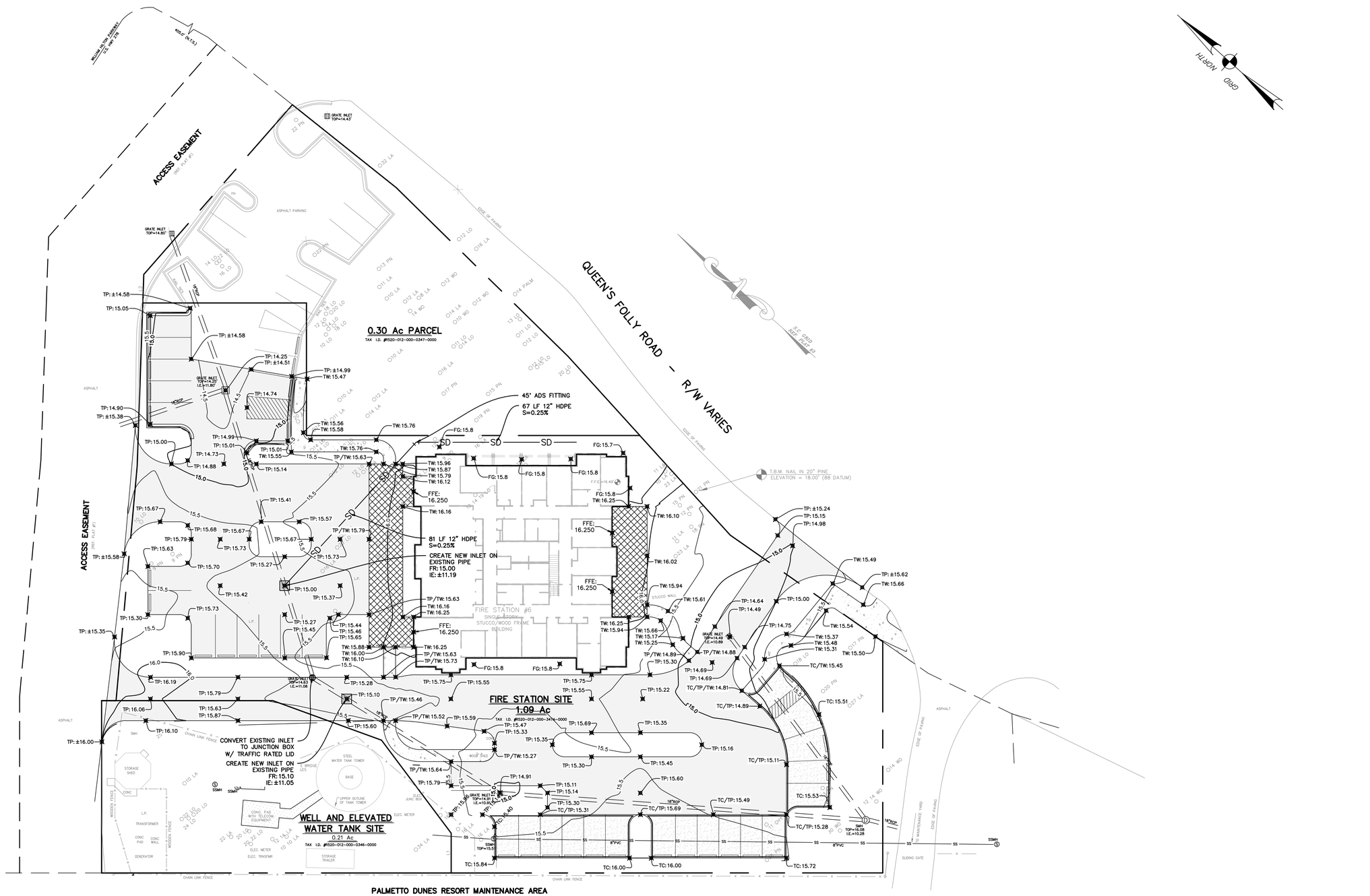

NO.	DESCRIPTION	DATE
1	PLAN REVISIONS	
2		
3		
4		
5		
6		
7		

SOUTH CAROLINA PROFESSIONAL ENGINEER LICENSED No. 25124 WILLIAM G. POWELL

SOUTH CAROLINA WARD EDWARDS, INC. No. C00152 CERTIFICATE OF AUTHORIZATION

Ward Edwards ENGINEERING
P.O. BOX 381, BLUFFTON, SOUTH CAROLINA 29910
PH (843) 837-5250 / FAX (843) 837-2558
WWW.WARDEDWARDS.COM

PALMETTO DUNES POA ADMINISTRATION BUILDING
TOWN OF HILTON HEAD ISLAND, SOUTH CAROLINA
PALMETTO DUNES POA
P. O. Box 7974, Hilton Head Island, SC 29938

PAVING, GRADING & DRAINAGE PLAN

☑ NOT FOR CONSTRUCTION
☐ RELEASED FOR CONSTRUCTION

PROJECT #:	120223B
DATE:	04/29/14
DESIGNED BY:	CAT
CHECKED BY:	WGP
SCALE:	1"=20'

SHEET
C700

IF THIS SHEET IS LESS THAN 22" X 34" IT IS A REDUCED PRINT, SCALE ACCORDINGLY

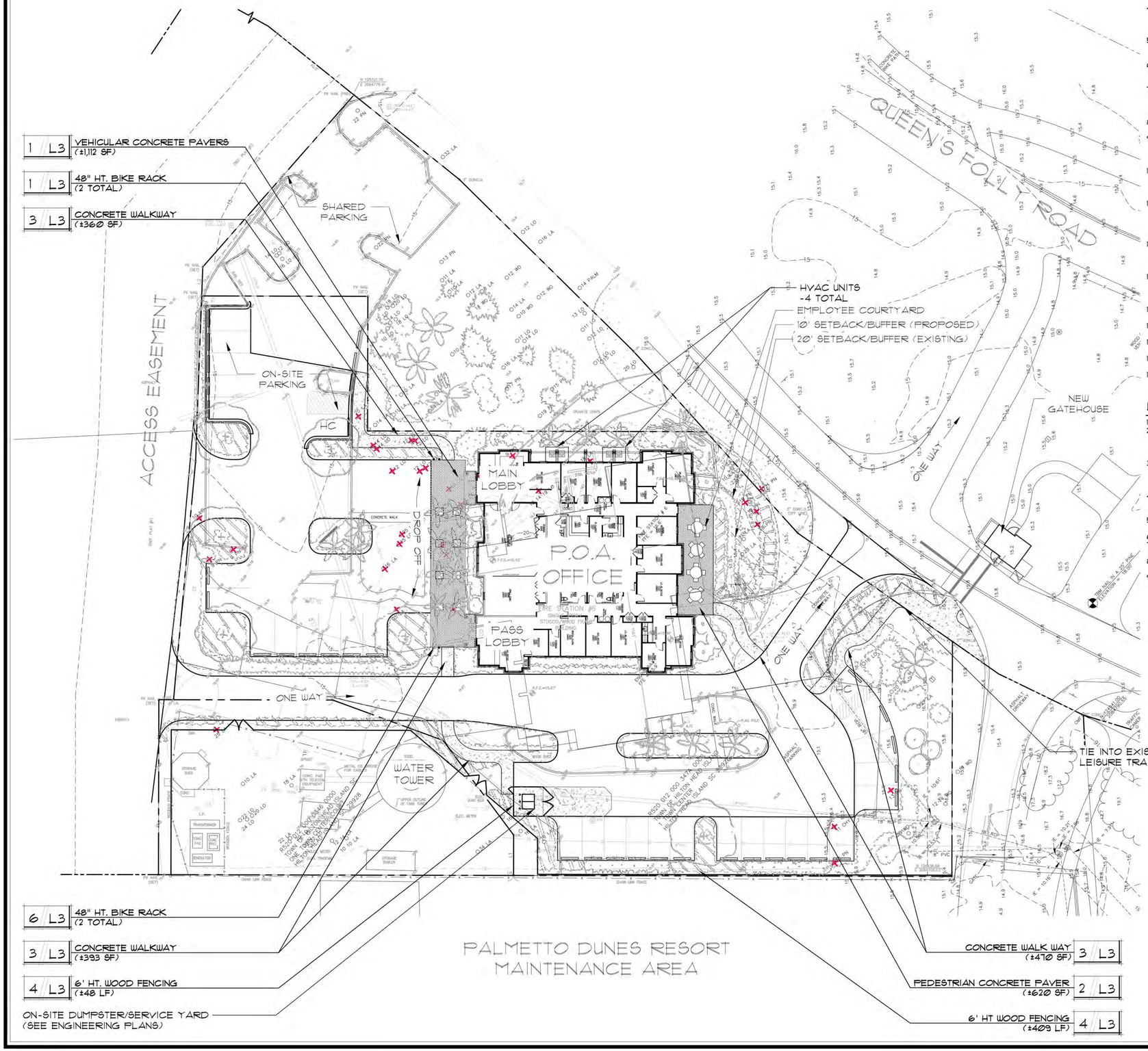

GENERAL NOTES:

1. ALL NOTES APPLY TO ALL DRAWINGS AND ALL TRADES.
2. REFER TO ENGINEERING PLANS FOR LAYOUT AND LOCATION OF UTILITIES AND ROADS.
3. THIS IS A DESIGN DEVELOPMENTS SET USED TO DESCRIBE THE DESIGN INTENT ONLY. ALL CONSTRUCTION DETAILS, LAYOUT, GRADING, UTILITIES, PROPERTY LINES, ETC. MUST BE FIELD VERIFIED WITH ANY DISCREPANCIES REPORTED TO THE OWNERS OR OWNERS REPRESENTATIVE. ALL CONSTRUCTION MUST ADHERE TO OR EXCEED REGULATIONS AND CODES OF THE AMERICANS WITH DISABILITIES ACT, ALL NATIONAL, STATE, LOCAL AND OTHER GOVERNING AUTHORITIES. WJK. LTD. IS NOT RESPONSIBLE FOR ANY WRONGFUL CONSTRUCTION PRACTICES.
4. ALL SURVEY AND SITE INFORMATION WERE COMPLIED FROM A VARIETY OF SOURCES AT VARIOUS TIMES. SITE INFORMATION MUST BE FIELD VERIFIED BEFORE CONSTRUCTION BEGINS, REPORT ANY DISCREPANCIES TO THE OWNER OR OWNER'S REPRESENTATIVE.
5. IT IS THE RESPONSIBILITY OF ALL CONTRACTORS AND TRADES TO COORDINATE THE INSTALLATION OF THEIR WORK WITH THE INSTALLATION OF WORK BY ALL OTHER CONTRACTORS AND TRADES.
6. THE REQUIREMENTS OF THE SPECIFICATIONS, DRAWINGS, GENERAL REQUIREMENTS, AND ALL ITEMS OF THE CONTRACT DOCUMENTS ARE EQUALLY BINDING FOR ALL CONTRACTORS AND TRADES.
7. EACH CONTRACTOR IS REQUIRED TO MAINTAIN FULL (COLOR) SETS OF THE CONTRACT DOCUMENTS FOR HIS EMPLOYEES USE ON THE PROJECT TO ASSURE THAT ALL WORK IS PROPERLY COORDINATED AND FOR REVIEWS BY COUNTY AND / OR MUNICIPALITY OFFICIALS FOR INSPECTIONS.
8. THE CONTRACTOR IS RESPONSIBLE FOR ALL PERMITS AND INSPECTIONS AS REQUIRED BY LOCAL PLANNING, ZONING AND BUILDING CODE AUTHORITIES.
9. WJK LTD., THE OWNER AND / OR THE OWNER'S REPRESENTATIVE SHALL BE NOTIFIED OF ANY SITE CONDITIONS WHICH MAY NECESSITATE MODIFICATION TO THE PLAN. THE OWNER OR OWNER±S REPRESENTATIVE SHALL MAKE 'INFIELD MODIFICATIONS,' IF NECESSARY.
10. CONTRACTOR SHALL FIELD LOCATE ALL UTILITIES AND CONFIRM/ DETERMINE UTILITY ELEVATIONS PRIOR TO CONSTRUCTION. CONTRACTOR IS RESPONSIBLE FOR ANY DAMAGE AND MAKE REPAIRS THAT MAY OCCUR TO EXISTING UTILITIES IN ACCORDANCE WITH NATIONAL, STATE AND LOCAL CODES.
11. CONTRACTOR SHALL VERIFY ALL EXISTING TREE CONDITIONS AND ELEVATIONS PRIOR TO CONSTRUCTION. CONTRACTOR SHALL NOTIFY THE OWNER OR OWNER'S REPRESENTATIVE OF ANY DISCREPANCIES PRIOR TO THEIR REMOVAL. CONTRACTOR SHALL PROTECT AND INSTALL TREE PROTECTION FENCE AROUND THE DRIP LINE OF ALL TREES TO REMAIN.
12. CONTRACTOR SHALL STAKE ALL WORK TO BE CONSTRUCTED AND OBTAIN APPROVAL FROM THE OWNER OR OWNER'S REPRESENTATIVE PRIOR TO CONSTRUCTION. ANY DISCREPANCIES SHALL BE RESOLVED WITH THE OWNER OR OWNER'S REPRESENTATIVE PRIOR TO CONSTRUCTION.
13. ALL CONSTRUCTION FOR ALL TRADES SHALL CONFORM TO OR EXCEED THE PRODUCT MANUFACTURER'S RECOMMENDATIONS, REGULATIONS OF BEAUFORT COUNTY AND THE AMERICANS WITH DISABILITIES ACT, AND / OR OTHER APPLICABLE NATIONAL, STATE, AND LOCAL CODES AND ANY OTHER GOVERNING AUTHORITIES.
14. CONTRACTOR ACCESS FOR CONSTRUCTION AS DIRECTED BY THE OWNER OR OWNER'S REPRESENTATIVE.
15. ALL DEMOLISHED MATERIAL SHALL BE DISPOSED OF PER APPLICABLE BEAUFORT COUNTY CODE(S).
16. CONTRACTOR SHALL PROTECT THE GENERAL PUBLIC FROM CONSTRUCTION AREAS DURING CONSTRUCTION.
17. THE OWNER MAY REQUIRE FLAG MEN TO BE AVAILABLE DURING THE CONSTRUCTION PROCESS.
18. ANY DEVIATIONS FROM THESE PLANS MUST BE SPECIFICALLY APPROVED BY WJK LTD., AND THE OWNER OR OWNER'S REPRESENTATIVE.

LAYOUT NOTES:

1. ALL CONSTRUCTION STAKING SHALL BE THE RESPONSIBILITY OF THE CONTRACTOR.
2. ALL SITE IMPROVEMENTS REPRESENTED IN THIS SET OF PLANS SHALL BE STAKED AND REVIEWED WITH THE OWNER OR OWNER'S REPRESENTATIVE PRIOR TO CONSTRUCTION. ANY DISCREPANCIES TO BE REPORTED TO THE OWNER, OWNER'S REPRESENTATIVE OR LAND&CAPE ARCHITECT.
3. THE OWNER'S OR OWNER'S REPRESENTATIVE SHALL BE NOTIFIED OF ANY SITE CONDITIONS WHICH MAY NECESSITATE MODIFICATION TO THE PLAN. THE OWNER OR OWNER'S REPRESENTATIVE SHALL, IF NECESSARY, MAKE OR APPROVE INFIELD MODIFICATIONS PRIOR TO CONSTRUCTION.
4. CONTRACTOR SHALL FIELD VERIFY ALL UTILITIES PRIOR TO CONSTRUCTION AND SHALL NOTIFY OWNER OR OWNER'S REPRESENTATIVE OF ANY DISCREPANCIES. CONTRACTOR IS RESPONSIBLE FOR ANY DAMAGE THAT MAY OCCUR TO EXISTING UTILITIES.
5. ALL DIMENSIONS ARE TO EDGE OF PAVING AND CENTERLINE OF WALLS AND COLUMNS UNLESS OTHERWISE INDICATED.
6. ALL ANGLES ARE 90 UNLESS OTHERWISE INDICATED.
7. CONTRACTOR SHALL PROVIDE LIGHTING, IRRIGATION AND ANY OTHER CONDUIT NEEDED TO ALL LANDSCAPE AREAS.
8. THE CONTRACTOR SHALL PROTECT ALL TREES AND VEGETATION THAT IS NOT SCHEDULED TO BE REMOVED.
9. ANY DEVIATION FROM THESE PLANS MUST BE SPECIFICALLY APPROVED BY THE OWNER OR OWNER'S REPRESENTATIVE.

SHEET INDEX

L1 - LAYOUT PLAN
L2 - PLANTING PLAN
L3 - DETAILS

N E W

0 10 20 30 40 50 60 70 80

Scale ♦ 1 inch equals 20'

BID SET

NOT FOR CONSTRUCTION

TOPO AND BOUNDARY SURVEYS, EXISTING TREES AND SURVEY DATA WERE TAKEN FROM DIGITAL PROVIDED BY:

SEA ISLAND LAND SURVEY
HILTON HEAD ISLAND, SC 29910
(843) 681-3248

Wilmer Jones Keefer Ltd.
landscape architecture land planning
www.wjkltd.com
14 Palmetto Way, Suite A • Bluffton, South Carolina • 29910 • ph 843.757.7411

LANDSCAPE DEVELOPMENT PLAN FOR PROPERTY OWNERS ASSOCIATION OFFICE

PALMETTO DUNES
HILTON HEAD ISLAND, SOUTH CAROLINA

DRAWING TITLE:
LAYOUT PLAN

DATE:	4-29-14
PROJECT NO.:	1042.03
DRAWN BY:	BK
CHECKED BY:	BW/DK

REVISIONS:

DRAWING NUMBER:

L1 OF 3

EXISTING TREE CALCULATIONS

QTY.	LABEL	DESCRIPTION	CALIPER (INCHES)	TOTAL	CATEGORY	TREE VALUE FACTOR
8	LA	LAUREL OAK	10", (2) 11", (2) 16", 23", 27", & 28"	142"	I	142"
1	LO	LIVE OAK	18"	18"	I	18"
3	PN	PINE	18" 20" & 24"	62"	II	46.5"
4	WO	WHITE OAK	10", 12", 15", & 30"	67"	II	50.25"
1	PLM	SABAL PALM	16"	16"	IV	4"
			TOTAL	305"		260.75"

TREE COVERAGE CALCULATIONS:

TOTAL SITE:	47,628 SF/±1.09 AC
MAX. IMPERVIOUS:	±0.71 AC (65%)
REMAINING PERVIOUS:	±0.38
MATURITY COVERAGE:	±0.38 X 900 = 342"
ACI (REQ. AFTER DEV.):	342"
ACI (AFTER DEV.):	261"
REPLACEMENT INCHES REQ.:	342-261 = 81" x 0.3 = 24.3"
REPLACEMENT INCHES PROP.:	GREATER THAN 24.3"

(* INDICATES PROP. PLANTING INCLUDED IN CALCULATIONS)

PLANTING NOTES:

1. ANY DEVIATION FROM THESE PLANS MUST BE SPECIFICALLY APPROVED BY LANDSCAPE ARCHITECT OR OWNER'S REPRESENTATIVE.
2. NOTIFY LANDSCAPE ARCHITECT OF ANY SITE CONDITIONS WHICH MAY NECESSITATE MODIFICATION TO THE PLAN. LANDSCAPE ARCHITECT SHALL, IF NECESSARY, MAKE "IN-FIELD MODIFICATIONS".
3. FINE GRADING SHALL CONSIST OF HAND RAKED SMOOTH, FREE OF DEBRIS, ALL AREAS TO RECEIVE LANDSCAPE PLANTING AND/OR MULCH.
4. CONTRACTOR IS RESPONSIBLE FOR INSPECTION OF EXISTING CONDITIONS AND PROMPTLY REPORTING ANY DISCREPANCIES. CONTRACTOR TO PERFORM SOIL TESTS AS NECESSARY TO ASSURE PLANT HEALTH AND GROWTH.
5. CONTRACTOR IS RESPONSIBLE FOR LOCATING EXISTING UTILITIES AND HE IS RESPONSIBLE FOR ANY DAMAGE THAT MAY OCCUR TO EXISTING UTILITIES.
6. CONTRACTOR TO MAKE NECESSARY ADJUSTMENTS TO EXISTING IRRIGATION TO ENSURE ALL PLANTS RECEIVE 100% COVERAGE.
7. MULCH ALL PLANTING BEDS WITH MULCH TO A 3" DEPTH.
8. CONTRACTOR VERIFIES THAT ALL PLANT MATERIAL IS DETERMINED AVAILABLE AS SPECIFIED WHEN BID/PROPOSAL IS SUBMITTED.
9. PLANT SCHEDULE WAS PREPARED FOR ESTIMATING PURPOSES. CONTRACTOR SHALL MAKE OWN QUANTITIES TAKEOFF USING DRAWINGS TO DETERMINE QUANTITIES TO HIS SATISFACTION, REPORTING PROMPTLY ANY DISCREPANCIES WHICH MAY AFFECT BIDDING.
10. ROOT TYPE MAY BE FREELY SUBSTITUTED IN CASE OF BALLED AND BURLAPPED OR CONTAINER GROWN, OTHER SPECIFICATIONS REMAINING UNCHANGED.
11. ANY SIGNIFICANT TREE ROOTS ENCOUNTERED 2" DIA. AND LARGER SHALL BE DUG OUT BY HAND AND CLEANLY CUT BACK IN THE FOOTING / FOUNDATION AREA TO PROMOTE ROOT RE-GROWTH AND HELP PREVENT ROOT DIEBACK.
12. IRRIGATION SHALL NOT SPRAY BEYOND LANDSCAPED AREAS OR INTO ROADWAYS OR PARKING AREAS.
13. IRRIGATION HEADS SHALL NOT BE LOCATED WITHIN 5' OF EDGE OF PAVEMENT OR CURB.
14. CONTRACTOR SHALL SUBMIT IRRIGATION PLAN FOR APPROVAL BY OWNERS REPRESENTATIVE PRIOR TO CONSTRUCTION.

POA PLANT SCHEDULE:

Quantity	Abbrev.	Botanical Name	Common Name	Height	Spread	Container	Cal/Spacing	Notes
Trees								
17	SABF	Sabal Palmetto	Sabal Palm	10-14'	-	-	-	See plan for heights
* 5	QUEV	Quercus virginiana	Live Oak	12-16'	10-12'	-	4" calip.	
Undersitory								
2	BUTC	Butia capitata	Pindo Palm	8-7'	30-36"	-	-	Full to base
Shrubs								
14	AZIF	Azalea indica	Formosa Azalea	30"	30"	7 gal.	-	
13	AZIG	Azalea indica	G.G. Gerbing Azalea	30"	30"	7 gal.	-	
2	CAMJ	Camelia japonica	Japonica Camelia	48"	36-42"	container	-	Red Flowering Variety
6	HYDM	Hydrangea macrophylla	Endless Summer	24-30"	24-30"	7 gal.	-	White / Blue Flowering
18	ILLF	Illicium floridanum	Florida Anise	30"	24-30"	7 gal.	-	
48	OSMF	Osmanthus fragrans	Fragrant Olive	3-4'	3-4'	15 gal.	-	
46	POGR	Podocarpus macrophyllus 'Pringle'	Dwarf Podocarpus	18-24"	24"	15 gal.	-	
44	PODM	Podocarpus macrophyllus	Podocarpus	4-5'	3-4'	15 gal.	-	
3	RHAH	Rhapidophyllum hystrix	Needle Palm	3-4'	-	15 gal.	-	
24	SERC	Serenoa repens 'Cinera'	Silver Sav- Palmetto	18-24"	18-24"	7 & 3 gal.	-	50/50 mix of sizes
7	SERR	Serenoa repens	Sav- Palmetto	30"	30"	7 & 3 gal.	-	50/50 mix of sizes
Grasses/ Vines/ Groundcovers								
285	ANNL	Annuals	Seasonal Color	4-6"	4-6"	1 gal.	8" O.C.	
150	DRYE	Dryopteris erythrosora	Autumn Fern	10-12"	8-12"	1 gal.	18" O.C.	
60	LIRM	Liriope		-	-	1 gal.	18" O.C.	
250	MUHL	Muhlenbergia capillaris	Muhly Grass	14-16"	12-18"	3 gal.	30" O.C.	
50	PLUB	Plumbago auriculata	Plumbago	20"	12"	1 gal.	18" O.C.	
15	TRAA	Trachelospermum asiaticum	Asiatic Jasmine	4-6"	12" runners	1 gal.	24" O.C.	
2,825	LAWN	Empire Zoysia Sod	Empire Zoysia Sod	-	-	-	-	
16,000	MULCH-SF	Pine Straw- all disturbed areas	Pine Straw	-	-	-	-	

GREENWOOD PROPERTY PLANT SCHEDULE:

Quantity	Abbrev.	Botanical Name	Common Name	Height	Spread	Container	Cal/Spacing	Notes
Undersitory								
8	BUTC	Butia capitata	Pindo Palm	6-7'	30-36"	-	-	Full to base
Shrubs								
9	AZIF	Azalea indica	Formosa Azalea	30"	30"	15 gal.	-	
2	SABM	Sabal minor	Dwarf Palmetto	2-3'	3-4'	container	-	
20	SERR	Serenoa repens	Sav- Palmetto	30"	30"	7 & 3 gal.	-	50/50 mix of sizes
Grasses/ Vines/ Groundcovers								
65	MUHL	Muhlenbergia capillaris	Muhly Grass	14-16"	12-18"	3 gal.	30" O.C.	
825	LAWN	Empire Zoysia Sod	Empire Zoysia Sod	-	-	-	-	
1,500	MULCH-SF	Pine Straw- all disturbed areas	Pine Straw	-	-	-	-	

TREE REMOVAL

QTY.	LABEL	DESCRIPTION	CALIPER (INCHES)	TOTAL
8	PN	PINE	(2) 9", 12", (2) 13", 15", 18", 21", 26" & 33"	169"
15	LO	LIVE OAK	9", (3) 10", (4) 12", (2) 14", 20", 24", & (2) 25"	209"
7	LA	LAUREL OAK	(2) 12", (2) 16" 20" & (2) 25"	126"
1	CHY	CHERRY	11"	11"

LIGHTING NOTES:

1. CONTRACTOR TO COORDINATE WITH THE OWNERS REPRESENTATIVE FOR THE LOCATION OF ELECTRICAL PANEL NEEDED FOR LIGHTING.
2. EXACT LOCATIONS OF LIGHTS, TRANSFORMERS, AND CONTROLLERS SHALL BE APPROVED BY THE LANDSCAPE ARCHITECT OR OWNER'S REPRESENTATIVE PRIOR TO INSTALLATION BY CONTRACTOR.
3. ALL LIGHTING EQUIPMENT SHALL BE INSTALLED PER MANUFACTURE'S INSTRUCTIONS AND RECOMMENDATIONS. CONTRACTOR IS RESPONSIBLE FOR ACQUIRING ALL PERMITS AND APPROVALS. INSTALLATION SHALL COMPLY WITH ALL APPLICABLE STATE AND COUNTY CODES.
4. ALL FIXTURES PER MODELS SPECIFIED UNLESS CONTRACTOR GETS APPROVAL FROM LANDSCAPE ARCHITECT FOR A SUBSTITUTION.
5. LIGHTING PLAN IS A DIAGRAMMATIC DRAWING AND EXACT LOCATIONS OF LIGHT FIXTURES SHOULD BE APPROVED BY LANDSCAPE ARCHITECT OR OWNER'S REPRESENTATIVE PRIOR TO INSTALLATION.
6. CONTRACTOR SHALL COORDINATE LOCATIONS FOR LIGHTING ELECTRICAL CONDUIT PRIOR TO HARDSCAPE CONSTRUCTION.
7. FIELD VERIFY LIGHT LOCATIONS PRIOR TO INSTALLATION.
8. ELECTRICAL SUPPLY TO BE BROUGHT TO SIGN BY PALMETTO DUNES.

LIGHTING SCHEDULE

QUAN.	SYMBOL	DESCRIPTION	SUPPLIER
3	■	SEE DETAIL 1/L1	SIMMONS IRRIGATION 25-D BUCKINGHAM PLANTATION DR BLUFFTON, SC 29910 WWW.FOCUSINDUSTRIES.COM
15	◗	FOCUS INDUSTRIES TREE UPLIGHT PRODUCT. DL-13-SC-BRS WITH 4 WATT ARROW LED	
3	▲	FOCUS IND. TREE LIGHT W/ LOUVRES LARGE SIZE PRODUCT. DL-38-NL-AC-BRS 120 V PAR 38 LED 21 W	SIMMONS IRRIGATION CONTRACT W/GATLOR, INC. CONTACT DAYNE MOCH T: 843-726-3269
5	●	STREET LIGHTS TO BE LEASED FROM PALMETTO ELECTRIC	CONTACT BEN BROUN WITH PALMETTO DUNES FOR SPECIFIC LIGHT POLE TYPE

NOTE: TREE LIGHTS ARE REGULAR VOLTAGE AND WILL REQUIRE A FOCUS INDUSTRIES TREE STRAP, INCLUDE IN CONTRACT

N E W

0 10 20 30 40 50 60 70 80

Scale ♦ 1 inch equals 20'

BID SET

NOT FOR CONSTRUCTION

TOPO AND BOUNDARY SURVEYS, EXISTING TREES AND SURVEY DATA WERE TAKEN FROM DIGITAL PROVIDED BY:

SURVEYING CONSULTANTS
HILTON HEAD ISLAND, SC
(803) 842-3304

Winner·Jones·Keefer Ltd.
landscape architecture land planning
www.wjkld.com
14 Palmetto Way, Suite A ♦ Bluffton, South Carolina ♦ 29910 ♦ ph 843.757.7411

LANDSCAPE DEVELOPMENT PLAN FOR PROPERTY OWNERS ASSOCIATION OFFICE

PALMETTO DUNES
HILTON HEAD ISLAND, SOUTH CAROLINA

DRAWING TITLE:
LANDSCAPE PLAN

DATE:	4-29-14
PROJECT NO.:	1042.03
DRAWN BY:	BK
CHECKED BY:	BW/DK

REVISIONS:

DRAWING NUMBER:

L2 OF 3

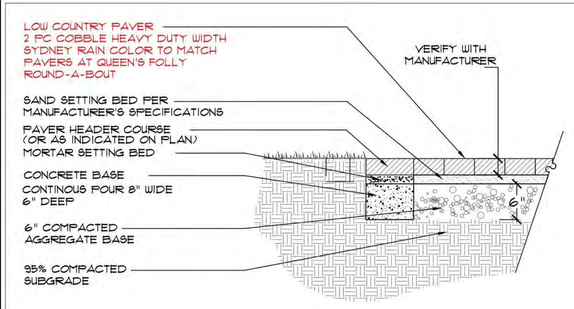

SECTION A-A'

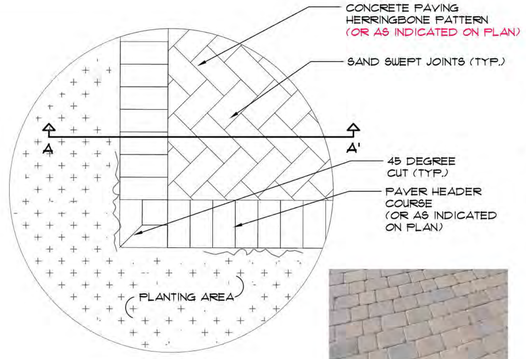

PLAN VIEW

SYDNEY RAIN CONC. PAVER

1 // L3 VEHICULAR CONCRETE PAVER

SCALE: 1"=1'-0"

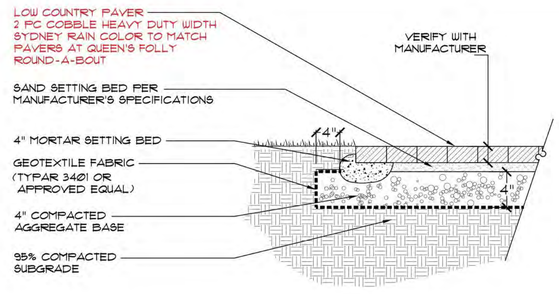

SECTION A-A'

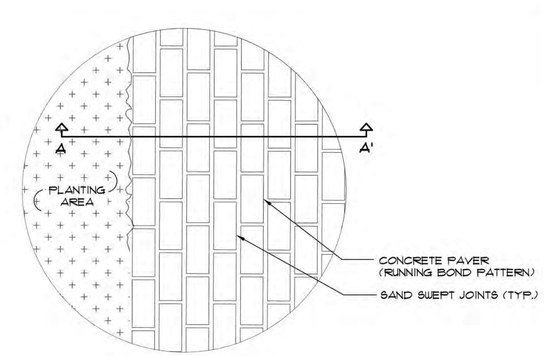

PLAN VIEW

2 // L3 PEDESTRIAN CONCRETE PAVER

SCALE: 1"=1'-0"

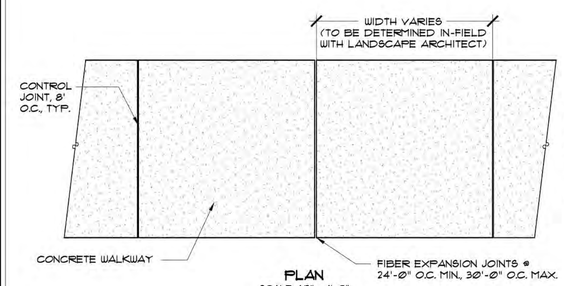

PLAN

SCALE: 1/2" = 1'-0"

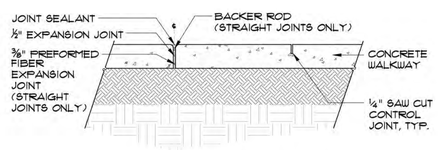

EXPANSION & CONTROL JOINT

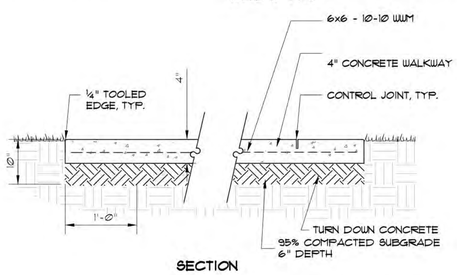

SECTION

NOTES:
1. CONCRETE WALKWAY SHALL HAVE BROOM SWEPT FINISH.
2. COLOR ADDITIVE: SCOFIELD CHROMIX ADMIXTURE - MESA BEIGE COLOR
3. PROVIDE MIN. 2% CROSS SLOPE ON ALL PAVED SURFACES FOR POSITIVE DRAINAGE.
4. CONSTRUCT EXPANSION JOINTS WHERE TRAILS MEET ANY CURBS, STEPS, WALLS OR FIXED SLABS.
5. SEE PLAN FOR WIDTH OF WALKWAY.

3 // L3 CONCRETE WALKWAY

SCALE: 1"=1'-0"

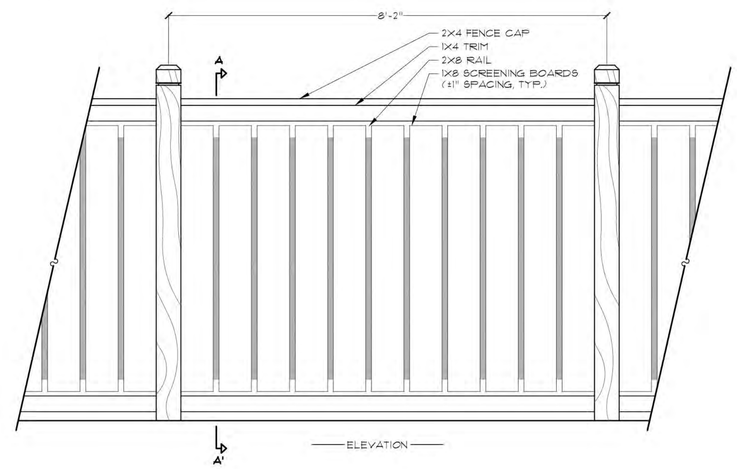

ELEVATION

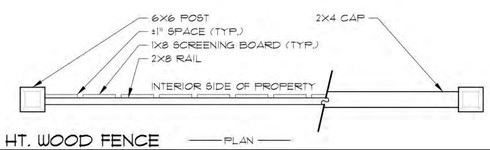

PLAN

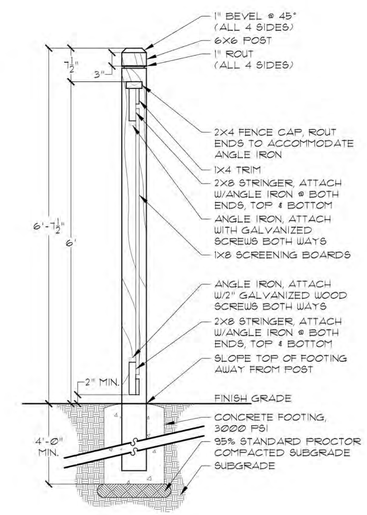

SECTION A-A'

NOTES:
1. 1" SPACING TYPICAL BETWEEN TRIM & SCREENING BOARDS
2. ALL WOOD TO BE STAINED CHARLESTON GREEN
3. ALL WOOD TO BE SOUTHERN YELLOW PINE

4 // L3 6' HT. WOOD FENCE

SCALE: ¾"=1'-0"

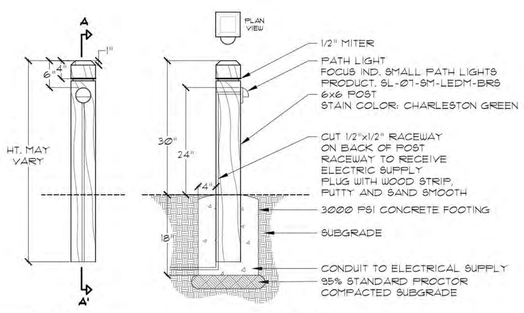

ELEVATION — SECTION A-A'

5 // L3 PATH LIGHT

SCALE: 1"=1'-0"

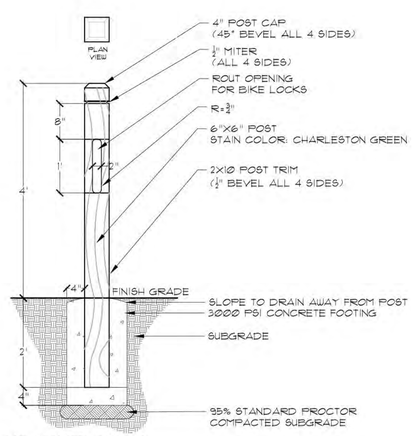

6 // L3 48" HT. BIKE RACK

SCALE: ¾"=1'-0"

BID SET
NOT FOR CONSTRUCTION

Winner, Jones, Keefer Ltd.
landscape architecture
land planning
www.wjkltd.com
14 Palmetto Way, Suite A • Bluffton, South Carolina • 29910 • ph 843.757.7411

LANDSCAPE DEVELOPMENT PLAN FOR PROPERTY OWNERS ASSOCIATION OFFICE

PALMETTO DUNES
HILTON HEAD ISLAND, SOUTH CAROLINA

DRAWING TITLE:
DETAILS

DATE:	4-29-14
PROJECT NO.:	1042.03
DRAWN BY:	BK
CHECKED BY:	BW/DK

REVISIONS:

DRAWING NUMBER:
L3 OF 3

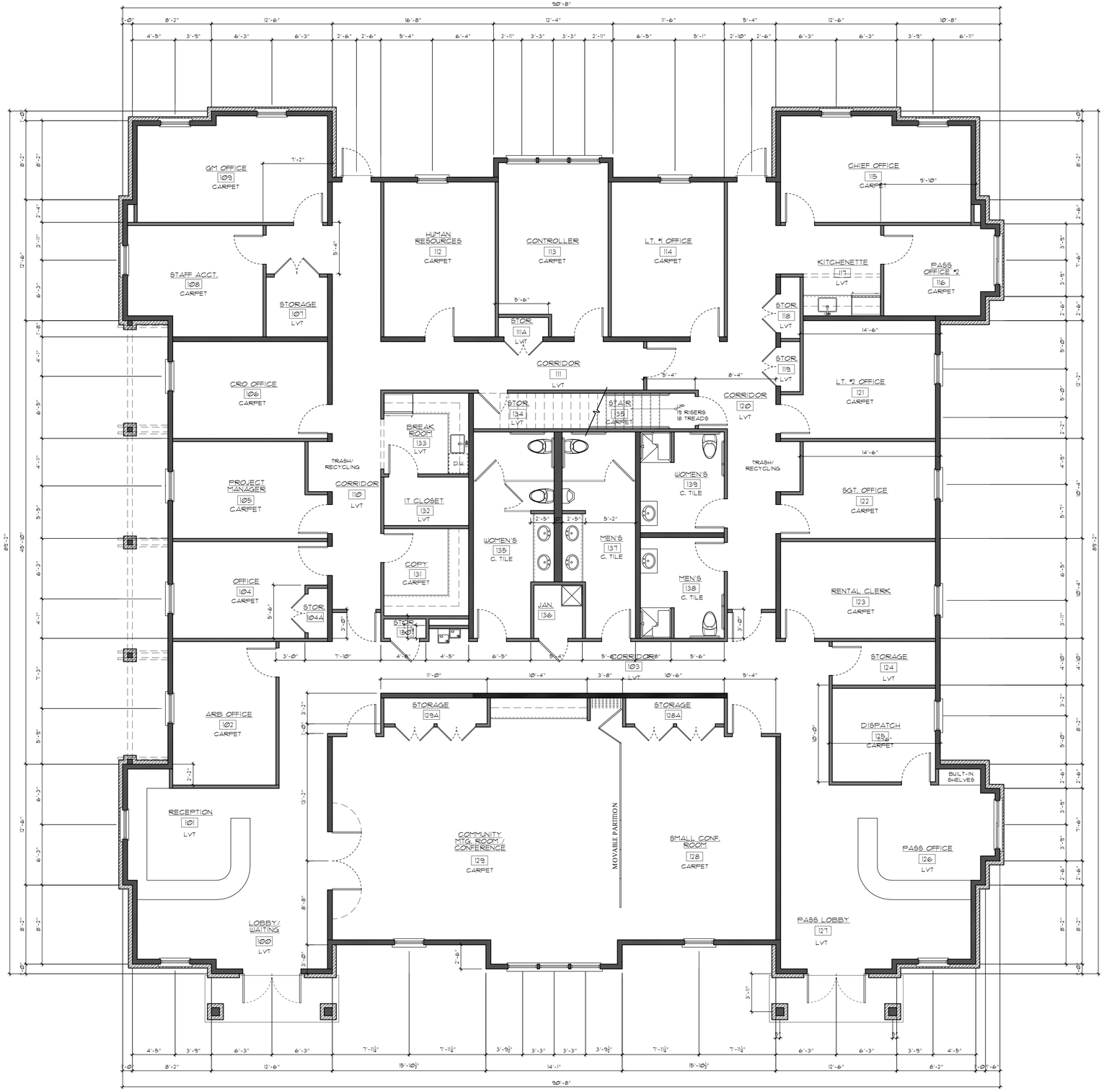

1 A2.1 FIRST FLOOR PLAN

SCALE 3/16" = 1'-0"

SEE COVER PAGE FOR NOTES AND LIMITATIONS TO ARCHITECTURAL SCOPE OF SERVICES.

GENERAL CONTRACTOR NOTE:
ADJUST TOP OF SLAB, WALL, AND ROOF BEARING PLATES AS REQUIRED FOR CHANGES IN STRUCTURAL MEMBER SIZES OR EXISTING SITE CONDITIONS.

GENERAL NOTE
ALL TOP OF WALL NOTES ARE TO THE TOP OF STUD/ BLOCK WALLS (SEE DETAILS FOR FINISHES)

GC/OWNER TO COORDINATE ALL IN-SLAB ELECTRICAL AND PLUMBING REQUIREMENTS WITH APPROPRIATE SUBCONTRACTOR TRADES PRIOR TO PLACING SLAB.

DIMENSION NOTE
DIMENSIONS ARE TO THE EDGE OF FOUNDATION AND FRAMING, U.O.N.
DO NOT SCALE DRAWINGS. CONTACT ARCHITECT WITH ANY DISCREPANCIES.

FOUNDATION NOTE
STRUCTURAL ENGINEERING DOCUMENTS SUPERCEDE ARCH. DOCUMENTS AND SCHEDULES WITH REGARD TO SIZE OF STRUCTURAL MEMBERS, PLACEMENT, AND CONNECTION DETAILS.

SEE STRUCTURAL ENGINEERING DRAWINGS FOR FOUNDATION DESIGN AND DETAILING.

ELECTRICAL NOTE
SEE ENGINEERING DOCUMENTS.
ALL WIRING AND DEVICES TO BE IN CONCEALED CONDUIT. GC TO COORDINATE CONDUIT.

PLUMBING NOTE
SEE ENGINEERING DOCUMENTS.
GC TO COORDINATE FLOOR DRAINS.

CIVIL/ LANDSCAPE NOTE (N.I.C.)
SEE ENGINEERING DOCUMENTS.
GC TO COORDINATE EXTERIOR DOORS WITH WALKWAYS TO MEET IBC 2012 SECTION 1008.1.5

WALL LEGEND
BRICK VENEER
2X6 WOOD STUDS
2X4 WOOD STUDS

SQUARE FOOTAGE SUMMARY

FIRST FLOOR	=	7,085 SF
SECOND FLOOR	=	560 SF
TOTAL	=	7,645 SF

FINAL DRB SUBMITTAL: PROJECT NO. DR-140021

COURT ATKINS ARCHITECTS
P.O. Box 3978 Bluffton, SC 29910
P: 843.815.2557 F: 843.815.2547

PALMETTO DUNES
ADMIN. AND SECURITY OFFICES
QUEEN FOLLY ROAD, HILTON HEAD ISLAND, SC

REVISIONS

SEAL

SEAL
NOT FOR CONSTRUCTION

© COURT ATKINS ARCHITECTS, INC.
THIS DRAWING IS THE PROPERTY OF THE ARCHITECT AND IS NOT TO BE REPRODUCED IN WHOLE OR IN PART BY ANY MEANS OR METHOD WITHOUT THE EXPRESS WRITTEN CONSENT OF THE ARCHITECT. ANY UNAUTHORIZED REPRODUCTION OR REUSE OF THESE DOCUMENTS WILL RESULT IN LEGAL ACTION.

PROJECT NO. 13-059
DATE 4/29/2014
DRAWN BY
CHECKED BY
SHEET NO. A2.1

DIMENSIONAL FLOOR PLAN

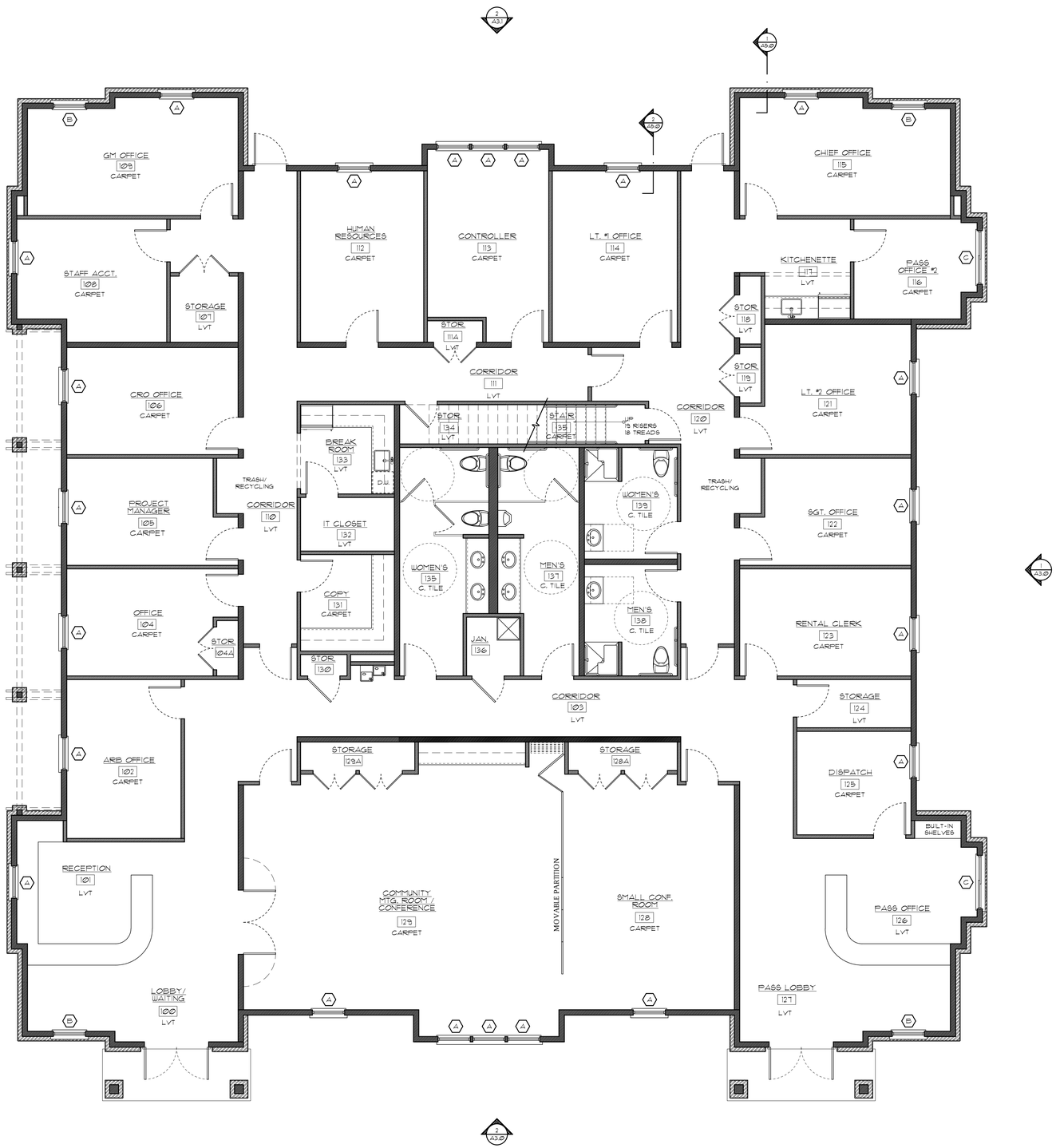

1 / A2.2 FIRST FLOOR PLAN
SCALE 3/16" = 1'-0"

SEE COVER PAGE FOR NOTES AND LIMITATIONS TO ARCHITECTURAL SCOPE OF SERVICES.

GENERAL CONTRACTOR NOTE:
ADJUST TOP OF SLAB, WALL, AND ROOF BEARING PLATES AS REQUIRED FOR CHANGES IN STRUCTURAL MEMBER SIZES OR EXISTING SITE CONDITIONS.

GENERAL NOTE
ALL TOP OF WALL NOTES ARE TO THE TOP OF STUD/ BLOCK WALLS (SEE DETAILS FOR FINISHES)

GC/OWNER TO COORDINATE ALL IN-SLAB ELECTRICAL AND PLUMBING REQUIREMENTS WITH APPROPRIATE SUBCONTRACTOR TRADES PRIOR TO PLACING SLAB.

DIMENSION NOTE
DIMENSIONS ARE TO THE EDGE OF FOUNDATION AND FRAMING, U.O.N.
DO NOT SCALE DRAWINGS. CONTACT ARCHITECT WITH ANY DISCREPANCIES.

FOUNDATION NOTE
STRUCTURAL ENGINEERING DOCUMENTS SUPERCEDE ARCH. DOCUMENTS AND SCHEDULES WITH REGARD TO SIZE OF STRUCTURAL MEMBERS, PLACEMENT, AND CONNECTION DETAILS.

SEE STRUCTURAL ENGINEERING DRAWINGS FOR FOUNDATION DESIGN AND DETAILING.

ELECTRICAL NOTE
SEE ENGINEERING DOCUMENTS.
ALL WIRING AND DEVICES TO BE IN CONCEALED CONDUIT. GC TO COORDINATE CONDUIT.

PLUMBING NOTE
SEE ENGINEERING DOCUMENTS.
GC TO COORDINATE FLOOR DRAINS.

CIVIL/ LANDSCAPE NOTE (N.I.C.)
SEE ENGINEERING DOCUMENTS.
GC TO COORDINATE EXTERIOR DOORS WITH WALKWAYS TO MEET IBC 2012 SECTION 1008.1.5

WALL LEGEND
BRICK VENEER
2X6 WOOD STUDS
2X4 WOOD STUDS

SQUARE FOOTAGE SUMMARY

FIRST FLOOR	=	7,085 SF
SECOND FLOOR	=	560 SF
TOTAL	=	7,645 SF

COURT ATKINS ARCHITECTS
P.O. Box 3978 Bluffton, SC 29910
P: 843.815.2557 F: 843.815.2547

PALMETTO DUNES
ADMIN. AND SECURITY OFFICES
QUEEN FOLLY ROAD, HILTON HEAD ISLAND, SC

REVISIONS

SEAL

SEAL
NOT FOR CONSTRUCTION

© COURT ATKINS ARCHITECTS, INC.
THIS DRAWING IS THE PROPERTY OF THE ARCHITECT AND IS NOT TO BE REPRODUCED IN WHOLE OR IN PART BY ANY MEANS OR METHOD WITHOUT THE EXPRESS WRITTEN CONSENT OF THE ARCHITECT. ANY UNAUTHORIZED REPRODUCTION OR REUSE OF THESE DOCUMENTS WILL RESULT IN LEGAL ACTION.

PROJECT NO. 13-059
DATE 4/29/2014
DRAWN BY
CHECKED BY
SHEET NO. A2.2

REFERENCE FLOOR PLAN

FINAL DRB SUBMITTAL: PROJECT NO. DR-140021

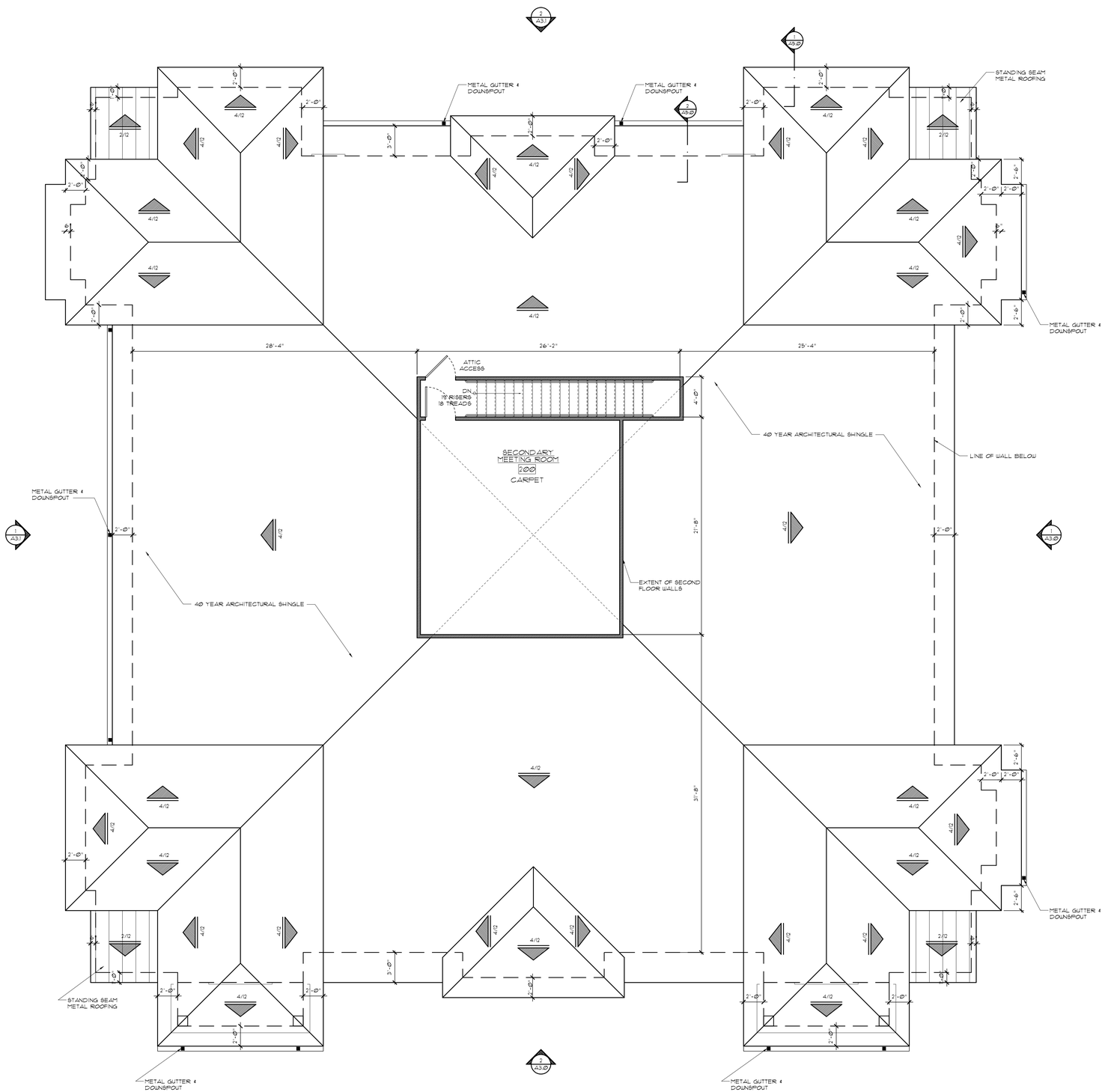

SECOND FLOOR / ROOF PLAN

A2.3 SCALE 3/16" = 1'-0"

SEE COVER PAGE FOR NOTES AND LIMITATIONS TO ARCHITECTURAL SCOPE OF SERVICES.

GENERAL CONTRACTOR NOTE:
ADJUST TOP OF SLAB, WALL, AND ROOF BEARING PLATES AS REQUIRED FOR CHANGES IN STRUCTURAL MEMBER SIZES OR EXISTING SITE CONDITIONS.

GENERAL NOTE
ALL TOP OF WALL NOTES ARE TO THE TOP OF STUD/ BLOCK WALLS (SEE DETAILS FOR FINISHES)

GC/OWNER TO COORDINATE ALL IN-SLAB ELECTRICAL AND PLUMBING REQUIREMENTS WITH APPROPRIATE SUBCONTRACTOR TRADES PRIOR TO PLACING SLAB.

DIMENSION NOTE
DIMENSIONS ARE TO THE EDGE OF FOUNDATION AND FRAMING, U.O.N.
DO NOT SCALE DRAWINGS. CONTACT ARCHITECT WITH ANY DISCREPANCIES.

FOUNDATION NOTE
STRUCTURAL ENGINEERING DOCUMENTS SUPERCEDE ARCH. DOCUMENTS AND SCHEDULES WITH REGARD TO SIZE OF STRUCTURAL MEMBERS, PLACEMENT, AND CONNECTION DETAILS.

SEE STRUCTURAL ENGINEERING DRAWINGS FOR FOUNDATION DESIGN AND DETAILING.

ELECTRICAL NOTE
SEE ENGINEERING DOCUMENTS.
ALL WIRING AND DEVICES TO BE IN CONCEALED CONDUIT. GC TO COORDINATE CONDUIT.

PLUMBING NOTE
SEE ENGINEERING DOCUMENTS.
GC TO COORDINATE FLOOR DRAINS.

CIVIL/ LANDSCAPE NOTE (N.I.C.)
SEE ENGINEERING DOCUMENTS.
GC TO COORDINATE EXTERIOR DOORS WITH WALKWAYS TO MEET IBC 2012 SECTION 1008.1.5

WALL LEDGED
STONE VENEER
2X6 WOOD STUDS
2X4 WOOD STUDS

COURT ATKINS ARCHITECTS
P.O. Box 3978 Bluffton, SC 29910
P: 843.815.2557 F: 843.815.2547

PALMETTO DUNES
ADMIN. AND SECURITY OFFICES
QUEEN FOLLY ROAD, HILTON HEAD ISLAND, SC

REVISIONS

SEAL

SEAL
NOT FOR CONSTRUCTION

© COURT ATKINS ARCHITECTS, INC.
THIS DRAWING IS THE PROPERTY OF THE ARCHITECT AND IS NOT TO BE REPRODUCED IN WHOLE OR IN PART BY ANY MEANS OR METHOD WITHOUT THE EXPRESS WRITTEN CONSENT OF THE ARCHITECT. ANY UNAUTHORIZED REPRODUCTION OR REUSE OF THESE DOCUMENTS WILL RESULT IN LEGAL ACTION.

PROJECT NO. 13-059
DATE 4/29/2014
DRAWN BY
CHECKED BY
SHEET NO. A2.3

SECOND FLOOR / ROOF PLAN

FINAL DRB SUBMITTAL: PROJECT NO. DR-140021

EXTERIOR MATERIALS LEGEND

	MATERIAL
1	40 YEAR ARCHITECTURAL SHINGLE - TIMBERLINE (WEATHERED WOOD)
2	PAINTED HARDIE TRIM - SHERWIN WILLIAMS (CUSTOM MATCH TO JELD WEN DESERT SAND)
3	STUCCO VENEER - DRYVIT: PRAIRIE CLAY
4	PAINTED HARDIE SHAKE SIDING - SHERWIN WILLIAMS (CUSTOM MATCH TO DRYVIT PRAIRIE CLAY)
5	JELD WEN FIXED CLAD WINDOW - COLOR: DESERT SAND
6	PAINTED COMPOSITE SHUTTERS W/ OPERABLE HARDWARE - BENJAMIN MOORE (POLO BLUE)
7	JELD WEN FIBERGLASS GLASS PANEL EXTERIOR DOOR - COLOR: DESERT SAND
8	PT WOOD COLUMN - SHERWIN WILLIAMS (CUSTOM MATCH TO JELD WEN DESERT SAND)
9	BRICK WAINSCOT - CHEROKEE BRICK MOSSTOWN
10	RED CEDAR BRACKET
11	JELD WEN SLIDING CLAD WINDOW - COLOR: DESERT SAND
12	JELD WEN SINGLE HUNG CLAD WINDOW - COLOR: DESERT SAND
13	RED CEDAR TRELLIS
14	MCELROY METAL STANDING SEAM METAL ROOFING SYSTEM - COLOR: PATRICIAN BRONZE

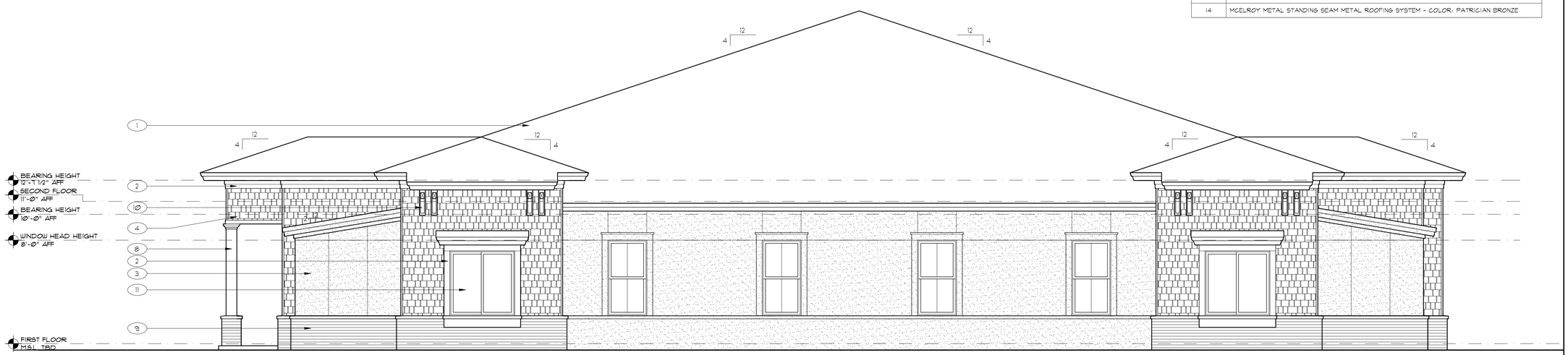

1 / A3.0 SIDE ELEVATION (EAST)
SCALE 1/4" = 1'-0"

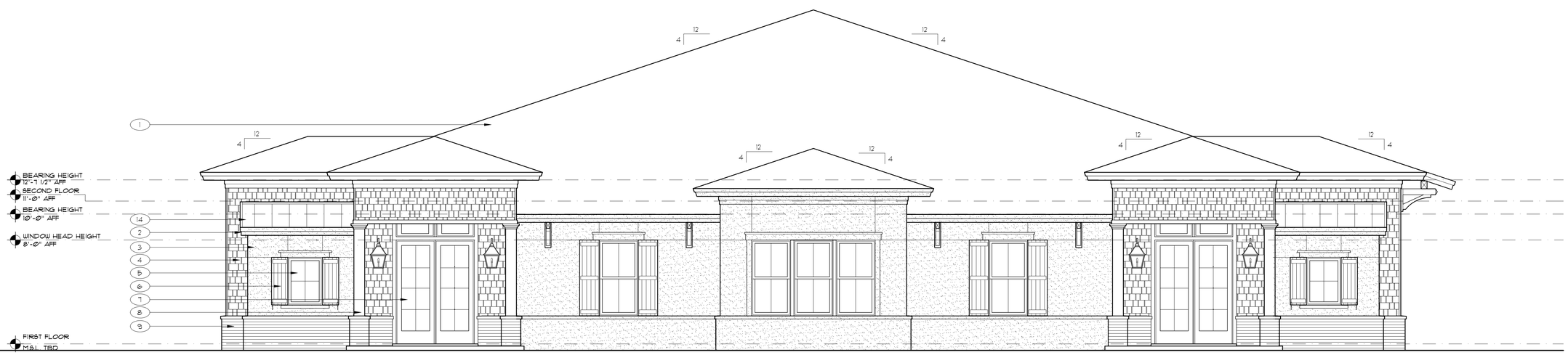

2 / A3.0 ENTRY ELEVATION (SOUTH)
SCALE 1/4" = 1'-0"

FINAL DRB SUBMITTAL: PROJECT NO. DR-140021

COURT ATKINS ARCHITECTS
P.O. Box 3978 Bluffton, SC 29910
P: 843.815.2557 F: 843.815.2547

PALMETTO DUNES
ADMIN. AND SECURITY OFFICES
QUEEN FOLLY ROAD, HILTON HEAD ISLAND, SC

REVISIONS

SEAL

SEAL
NOT FOR CONSTRUCTION

© COURT ATKINS ARCHITECTS, INC.
THIS DRAWING IS THE PROPERTY OF THE ARCHITECT AND IS NOT TO BE REPRODUCED IN WHOLE OR IN PART BY ANY MEANS OR METHOD WITHOUT THE EXPRESS WRITTEN CONSENT OF THE ARCHITECT. ANY UNAUTHORIZED REPRODUCTION OR REUSE OF THESE DOCUMENTS WILL RESULT IN LEGAL ACTION.

PROJECT NO. 13-059
DATE 4/29/2014
DRAWN BY
CHECKED BY
SHEET NO. A3.0

ELEVATIONS

EXTERIOR MATERIALS LEGEND

	MATERIAL
1	40 YEAR ARCHITECTURAL SHINGLE - TIMBERLINE (WEATHERED WOOD)
2	PAINTED HARDIE TRIM - SHERWIN WILLIAMS (CUSTOM MATCH TO JELD WEN DESERT SAND)
3	STUCCO VENEER - DRYVIT; PRAIRIE CLAY
4	PAINTED HARDIE SHAKE SIDING - SHERWIN WILLIAMS (CUSTOM MATCH TO DRYVIT PRAIRIE CLAY)
5	JELD WEN FIXED CLAD WINDOW - COLOR: DESERT SAND
6	PAINTED COMPOSITE SHUTTERS W/ OPERABLE HARDWARE - BENJAMIN MOORE (POLO BLUE)
7	JELD WEN FIBERGLASS GLASS PANEL EXTERIOR DOOR - COLOR: DESERT SAND
8	PT WOOD COLUMN - SHERWIN WILLIAMS (CUSTOM MATCH TO JELD WEN DESERT SAND)
9	BRICK WAINSCOT - CHEROKEE BRICK MOSSTOWN
10	RED CEDAR BRACKET
11	JELD WEN SLIDING CLAD WINDOW - COLOR: DESERT SAND
12	JELD WEN SINGLE HUNG CLAD WINDOW - COLOR: DESERT SAND
13	RED CEDAR TRELLIS
14	MCELROY METAL STANDING SEAM METAL ROOFING SYSTEM - COLOR: PATRICIAN BRONZE

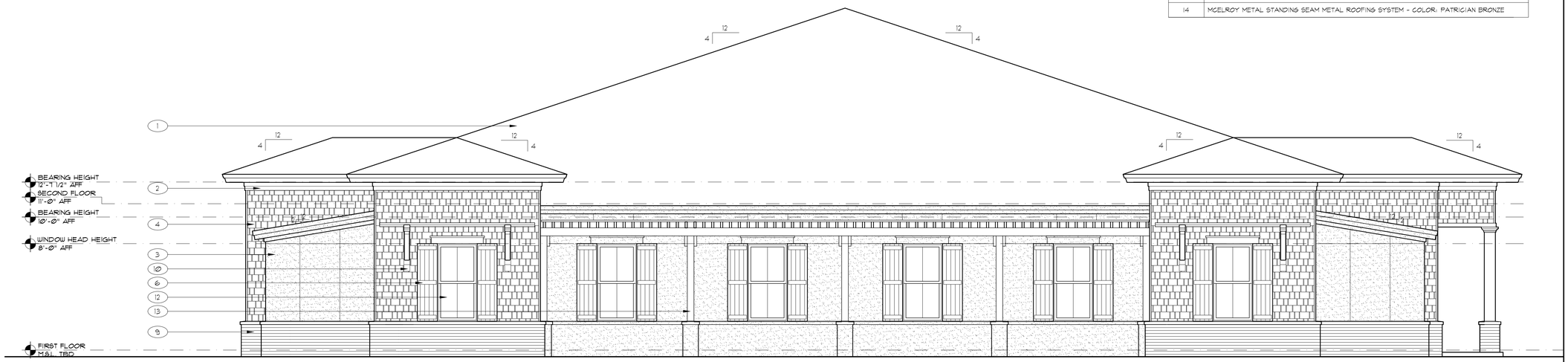

1 A3.1 SIDE ELEVATION (WEST)
SCALE 1/4" = 1'-0"

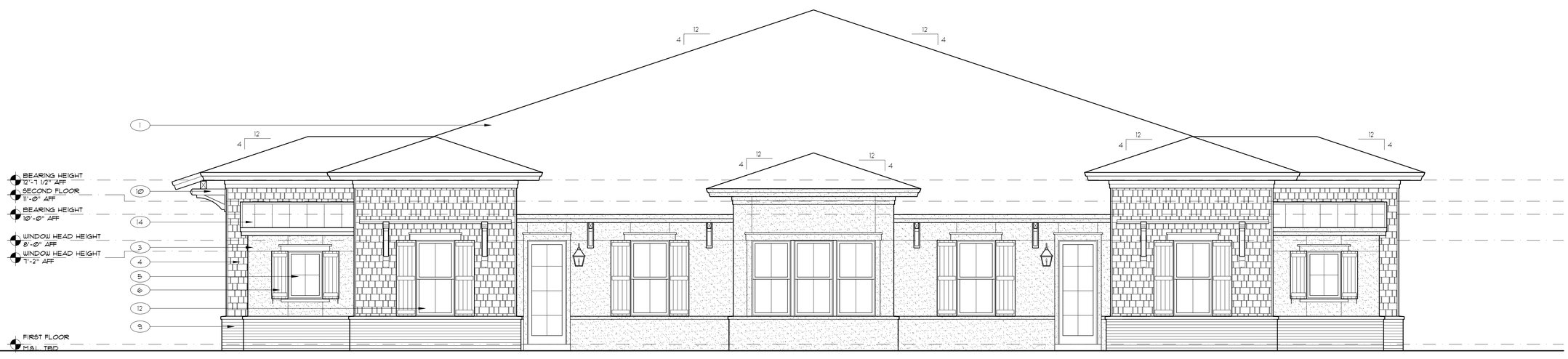

2 A3.1 REAR ELEVATION (NORTH)
SCALE 1/4" = 1'-0"

FINAL DRB SUBMITTAL: PROJECT NO. DR-140021

COURT ATKINS ARCHITECTS
P.O. Box 3978 Bluffton, SC 29910
P: 843.815.2557 F: 843.815.2547

PALMETTO DUNES
ADMIN. AND SECURITY OFFICES
QUEEN FOLLY ROAD, HILTON HEAD ISLAND, SC

REVISIONS

SEAL

SEAL
NOT FOR CONSTRUCTION

© COURT ATKINS ARCHITECTS, INC.
THIS DRAWING IS THE PROPERTY OF THE ARCHITECT AND IS NOT TO BE REPRODUCED IN WHOLE OR IN PART BY ANY MEANS OR METHOD WITHOUT THE EXPRESS WRITTEN CONSENT OF THE ARCHITECT. ANY UNAUTHORIZED REPRODUCTION OR REUSE OF THESE DOCUMENTS WILL RESULT IN LEGAL ACTION.

PROJECT NO. 13-059
DATE 4/29/2014
DRAWN BY
CHECKED BY
SHEET NO. A3.1

ELEVATIONS

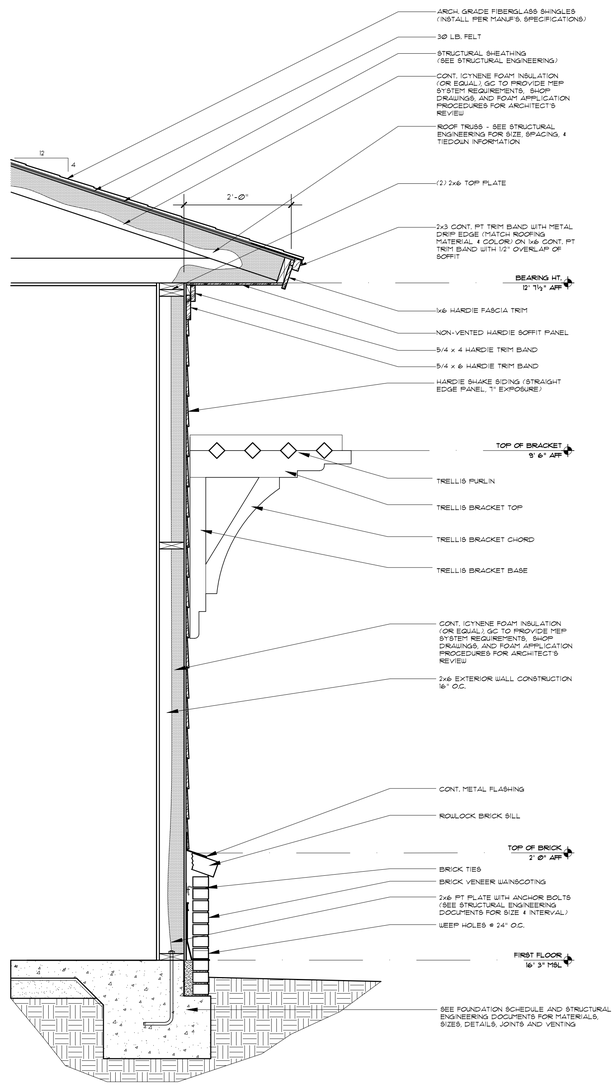

1 A5.0 TYPICAL WALL SECTION
SCALE 3/4" = 1'-0"

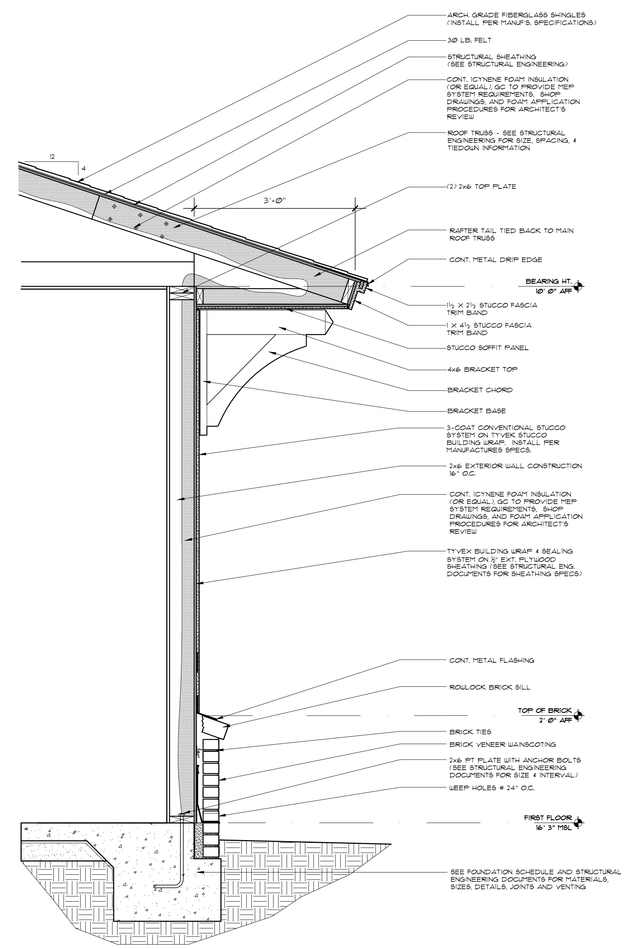

2 A5.0 TYPICAL WALL SECTION
SCALE 3/4" = 1'-0"

FINAL DRB SUBMITTAL: PROJECT NO. DR-140021

COURT ATKINS ARCHITECTS
P.O. Box 3978 Bluffton, SC 29910
P: 843.815.2557 F: 843.815.2547

PALMETTO DUNES
ADMIN. AND SECURITY OFFICES
QUEEN FOLLY ROAD, HILTON HEAD ISLAND, SC

REVISIONS

SEAL

SEAL
NOT FOR CONSTRUCTION

© COURT ATKINS ARCHITECTS, INC.
THIS DRAWING IS THE PROPERTY OF THE ARCHITECT AND IS NOT TO BE REPRODUCED IN WHOLE OR IN PART BY ANY MEANS OR METHOD WITHOUT THE EXPRESS WRITTEN CONSENT OF THE ARCHITECT. ANY UNAUTHORIZED REPRODUCTION OR REUSE OF THESE DOCUMENTS WILL RESULT IN LEGAL ACTION.

PROJECT NO.
13-059
DATE
4/29/2014
DRAWN BY
CHECKED BY
SHEET NO.
A5.0

WALL DETAILS

Main Entrance - West Elevation

Pass Drive Thru - South Elevation

Street View - East Elevation

Trellis Side - North Elevation

COURT ATKINS ARCHITECTS

P.O. Box 3978 Bluffton, SC 29910
P: 843.815.2557 F: 843.815.2547

PALMETTO DUNES
ADMIN. AND SECURITY OFFICES
QUEEN FOLLY ROAD, HILTON HEAD ISLAND, SC

REVISIONS

SEAL

SEAL

NOT FOR CONSTRUCTION

© COURT ATKINS ARCHITECTS, INC.
THIS DRAWING IS THE PROPERTY OF THE ARCHITECT AND IS NOT TO BE REPRODUCED IN WHOLE OR IN PART BY ANY MEANS OR METHOD WITHOUT THE EXPRESS WRITTEN CONSENT OF THE ARCHITECT. ANY UNAUTHORIZED REPRODUCTION OR REUSE OF THESE DOCUMENTS WILL RESULT IN LEGAL ACTION.

PROJECT NO. 13-059

DATE 02/19/2014

DRAWN BY

CHECKED BY

SHEET NO.

DESIGN TEAM/DRB COMMENT SHEET

The comments below are staff recommendations to the Design Review Board (DRB) and do NOT constitute DRB approval or denial.

PROJECT NAME: Palmetto Dunes Administration & Security Offices - NEW DEVELOPMENT - FINAL

DRB#: DR 140021

DATE: May 13, 2014

RECOMMENDATION: Approval ☒ Approval with Conditions ☐ Denial ☐

Based on comments by DRB at the April 22nd meeting, the applicant has modified the shutter color from "Polo Blue" to "Enduring Bronze", changed the roofing material for the 2:12 shed roof to standing seam metal roofing, and coordinated the location of the wood trellis with the landscape plan. Paving materials are in keeping with vehicular and pedestrian pavers found within Palmetto Dunes and recently approved by the DRB. A 6' height wood fence (stained "Charleston Green") has been added adjacent to the property line as well as a dumpster enclosure. The dumpster enclosure should match the wood fence in detail, color, and material.

Town of Hilton Head Island

Community Development Department
One Town Center Court
Hilton Head Island, SC 29928
Phone: 843-341-4757 Fax: 843-842-8908
www.hiltonheadislandsc.gov

FOR OFFICIAL USE ONLY
Date Received: 4/28/14
Accepted by: JR
App. #: DR
Meeting Date: 5/13/14

Applicant/Agent Name: David Howard Company: Leamington Association
Mailing Address: PO Box 7431 City: Hilton Head State: SC Zip: 29938
Telephone: 843-785-3278 Fax: 843-785-3381 E-mail: Howard@alliedhiltonhead.com
Project Name: Leamington Entrance Sign Project Address: Queens Way + 278
Parcel Number [PIN]: R520 016 00A 0334 0000
Zoning District: _____ Overlay District(s): _____

DESIGN REVIEW BOARD (DR) SUBMITTAL REQUIREMENTS

Digital Submissions may be accepted via e-mail by calling 843-341-4757.

Project Category:

____ New Development – Conceptual
____ New Development – Final, indicate Project Number
____ Alteration/Addition
X ~~Minor External Change~~ SIGN

Submittal Requirements for ***All*** projects:

N/A Private Architectural Review Board (ARB) Notice of Action (if applicable): When a project is within the jurisdiction of an ARB, the applicant shall submit such ARB's written notice of action per LMO Section 16-3-1004. Submitting an application to the ARB to meet this requirement is the responsibility of the applicant.

N/A Filing Fee, New Development $175, Alterations/Additions $100, Minor External $50 cash or check made payable to the Town of Hilton Head Island. (Waived)

Additional Submittal Requirements:

New Development – Conceptual Approval

____ A survey (1"=30' minimum scale) of property lines, existing topography and the location of trees meeting the tree protection regulations of Sec. 16-3-405, and if applicable, location of bordering streets, marshes and beaches.

____ A site analysis study to include specimen trees, access, significant topography, wetlands, buffers, setbacks, views, orientation and other site features that may influence design.

____ A draft written narrative describing the design intent of the project, its goals and objectives and how it reflects the site analysis results.

____ Context photographs of neighboring uses and architectural styles.

____ Conceptual site plan (to scale) showing proposed location of new structures, parking areas and landscaping.

____ Conceptual sketches of primary exterior elevations showing architectural character of the proposed development, materials, colors, shadow lines and landscaping.

Additional Submittal Requirements:

New Development – Final Approval

_____ A final written narrative describing how the project conforms with the conceptual approval and design review guidelines of Sec. 16-4-503.

_____ Final site development plan meeting the requirements of Sec. 16-3-303.F.

_____ Final site lighting and landscaping plans meeting the requirements of Sec. 16-3-304 and Sec. 16-3-305.

_____ Final floor plans and elevation drawings (1/8"=1'-0" minimum scale) showing exterior building materials and colors with architectural sections and details to adequately describe the project.

_____ A color board (11"x17" maximum) containing actual color samples of all exterior finishes, keyed to the elevations, and indicating the manufacturer's name and color designation.

_____ Any additional information requested by the Design Review Board at the time of concept approval, such as scale model or color renderings, that the Board finds necessary in order to act on a final application.

Additional Submittal Requirements:

Alterations/Additions *and* Minor External Changes

✓ A written narrative describing how project conforms to design guidelines of Section 16-4-503.

✓ Photographs and/or drawings of existing development.

✓ Drawings of the proposed development – 11"x 17".

✓ Material/color samples of existing and proposed changes - 8 ½"X 14" *Maximum*; Stating manufacturer and material name

Note: All application items must be received by the deadline date in order to be reviewed by the DRB per LMO Section 16-3-106.

A representative for each agenda item is strongly encouraged to attend the meeting.

Are there recorded private covenants and/or restrictions that are contrary to, conflict with, or prohibit the proposed request? If yes, a copy of the private covenants and/or restrictions must be submitted with this application. ☐YES ☐NO

To the best of my knowledge, the information on this application and all additional documentation is true, factual, and complete. I hereby agree to abide by all conditions of any approvals granted by the Town of Hilton Head Island. I understand that such conditions shall apply to the subject property only and are a right or obligation transferable by sale.

I further understand that in the event of a State of Emergency due to a Disaster, the review and approval times set forth in the Land Management Ordinance may be suspended.

SIGNATURE _____ DATE 4/26/19

Leamington
Association

April 25th, 2014

Leamington Front Entrance Sign

The Leamington Association's front entrance sign was removed as part of the town's project to add the stop light at Queen's Way and 278. The brick of our proposed sign will match the existing brick at the guard house and the retaining walls. The color of the lettering will be green to match existing green in Leamington and the font will be Times New Roman. There will be 2 39 watt LED flood lights, bronze in color, on each side of the wall hiding within the landscape beds. The background of the sign will be beige stucco to match the included drawings.

Please do not hesitate to contact me for more information: howard@alliedhiltonhead.com

David Howard

GM, Allied Management Group

total of 4 lights : 2 on each side

Created: 04/23/2014

FFLED39

Rectangular shaped LED floodlight designed to replace 150W Metal Halide. Patent Pending airflow technology ensures long LED and driver lifespan. Use for building facade lighting, sign lighting, LED landscape lighting and instant-on security lighting.

Color: Bronze

Weight: 12.5 lbs

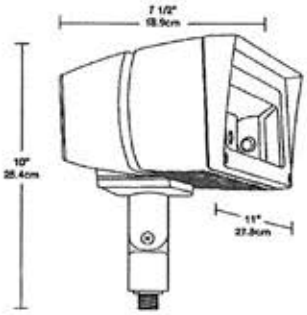

LED Info

Watts:	39W
Color Temp:	5000K (Cool)
Color Accuracy:	65
L70 Lifespan:	100000
LM79 Lumens:	4,596
Efficacy:	112 LPW

Driver Info

Type:	Constant Current
120V:	0.35A
208V:	0.20A
240V:	0.18A
277V:	0.15A
Input Watts:	41W
Efficiency:	95%

Technical Specifications

Lumen Maintenance:
100,000-hour LED lifespan based on IES LM-80 results and TM-21 calculations.

IP Rating:
Ingress Protection rating of IP65 for dust and water.

NEMA Type:
7H x 6V Beam Spread.

LEDs:
Two multi-chip, 26Watt high performance LEDs.

Driver:
Constant Current, Class 2, 1050mA, 100-277V, 50/60Hz, 0.6A, Power Factor 99%

THD:
7.7% at 120V, 6.8% at 277V

Surge Protection:
4kV

Ambient Temperature:
Suitable for use in 40°C ambient temperatures.

Cold Weather Starting:
The minimum starting temperature is -40°F/-40°C.

Thermal Management Housing:
Superior heat sinking with external Air-Flow fins.

Mounting:
Heavy-duty mounting arm with O ring seal & stainless steel screw.

Color Consistency:
7-step MacAdam Ellipse binning to achieve consistent fixture-to-fixture color.

Color Stability:
LED color temperature is warrantied to shift no more than 200K in CCT over a 5 year period.

Color Uniformity:
RAB's range of CCT (Correlated Color Temperature) follows the guidelines of the American National Standard for (SSL) Products, ANSI C78.377-2008.

Equivalency:
The FFLED39 is Equivalent in delivered lumens to a 150W Metal Halide.

Effective Projected Area:
EPA = 0.65

Reflector:
Specular vacuum-metallized polycarbonate

Gaskets:
High-temperature silicone gaskets.

Finish:
Our environmentally friendly polyester powder coatings are formulated for high-durability and long-lasting color, and contains no VOC or toxic heavy metals.

Green Technology:
Mercury and UV free.

IESNA LM-79 & LM-80 Testing:
RAB LED luminaires have been tested by an independent laboratory in accordance with IESNA LM-79 and LM-80, and have received the Department of Energy Lighting Facts label.

California Title 24:
FFLED39 complies with California Title 24 building and electrical codes.

Copyright ©2014 RAB Lighting Inc. All Rights Reserved

Warranty:
RAB warrants that our LED products will be free from defects in materials and workmanship for a period of five (5) years from the date of delivery to the end user, including coverage of light output, color stability, driver performance and fixture finish.

Patents:
The FFLED design is protected by U.S. Pat. D643,147, Canada Pat. 140798, China Pat. ZL201130171304.1, Mexico Pat. 36757 and pending patent in Taiwan.

UL Listing:
Suitable For Wet Locations. Suitable for mounting within 1.2M(4FT) of the ground.

Threaded Size:
1/2" threaded arm.

DLC Listed:
This product is on the Design Lights Consortium (DLC) Qualified Products List and is eligible for rebates from DLC Member Utilities.

Copyright ©2014 RAB Lighting Inc. All Rights Reserved
Note: Specifications are subject to change without notice

Column Caps to finish off as illustrated

Stucco to finish off with cove brick around edges as shown

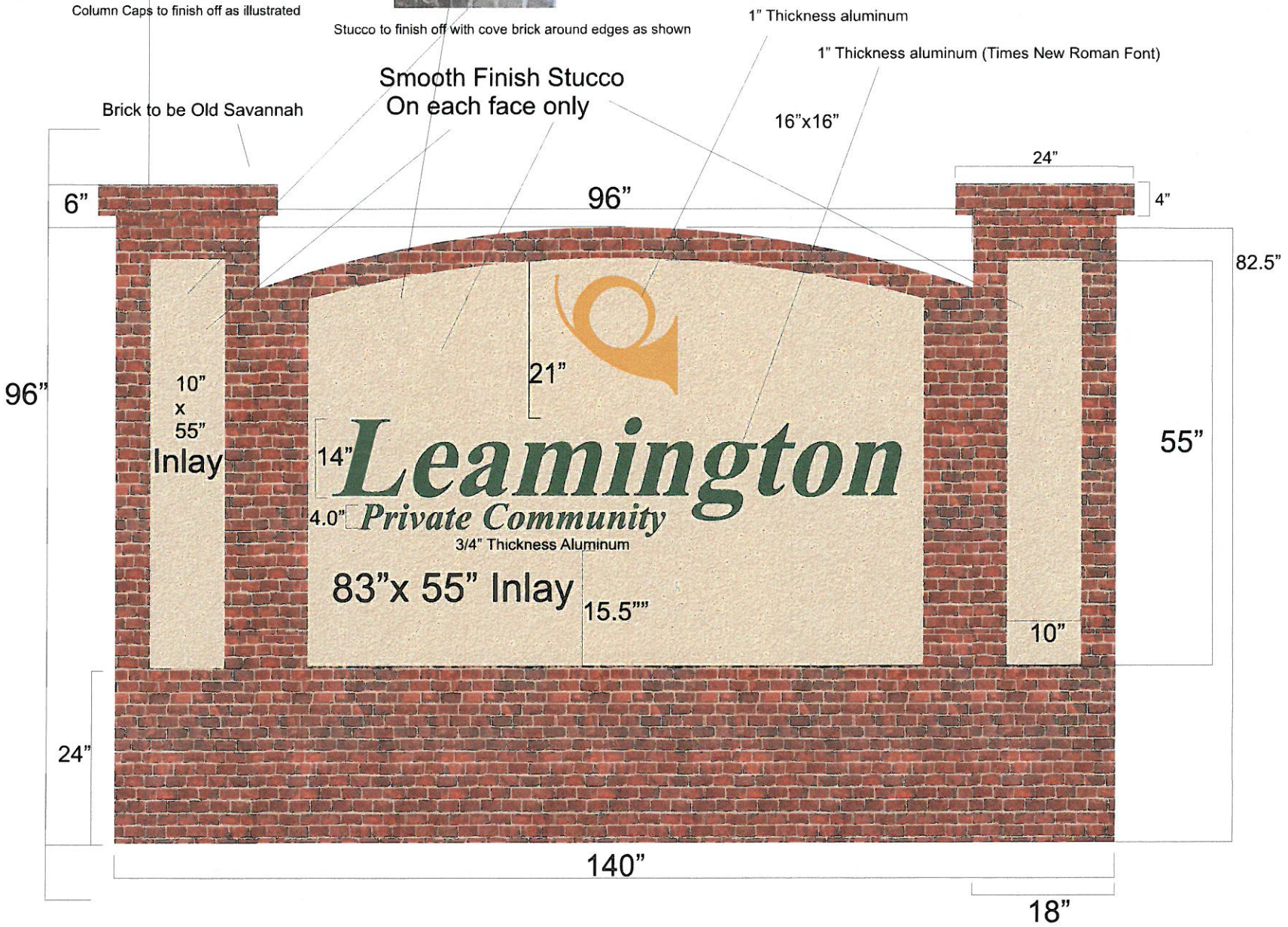

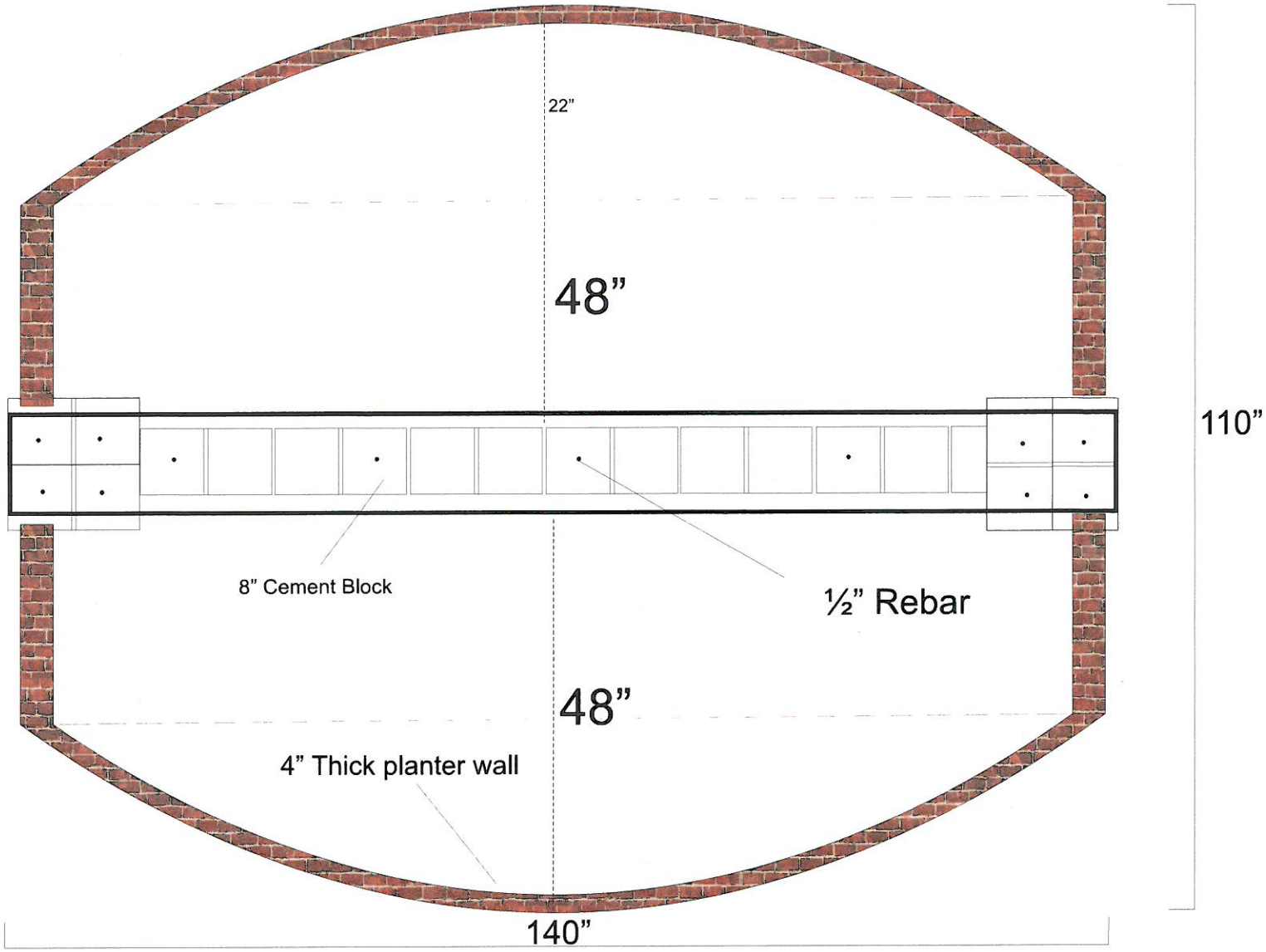
22"
48"
110"
8" Cement Block
½" Rebar
48"
4" Thick planter wall
140"

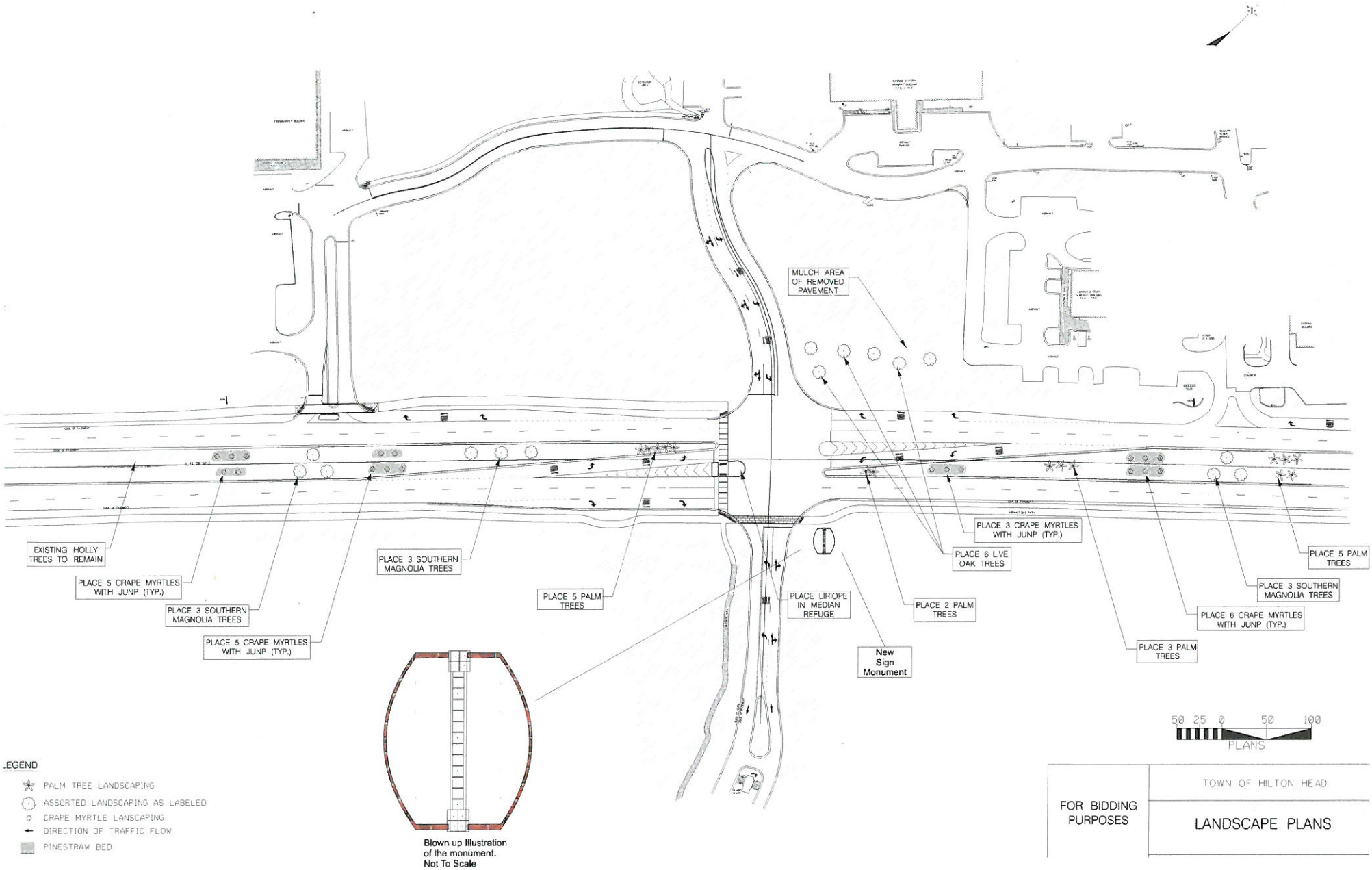

Blown up Illustration of the monument. Not To Scale

LEGEND

- PALM TREE LANDSCAPING
- ASSORTED LANDSCAPING AS LABELED
- CRAPE MYRTLE LANSCAPING
- DIRECTION OF TRAFFIC FLOW
- PINESTRAW BED

FOR BIDDING PURPOSES	TOWN OF HILTON HEAD
	LANDSCAPE PLANS

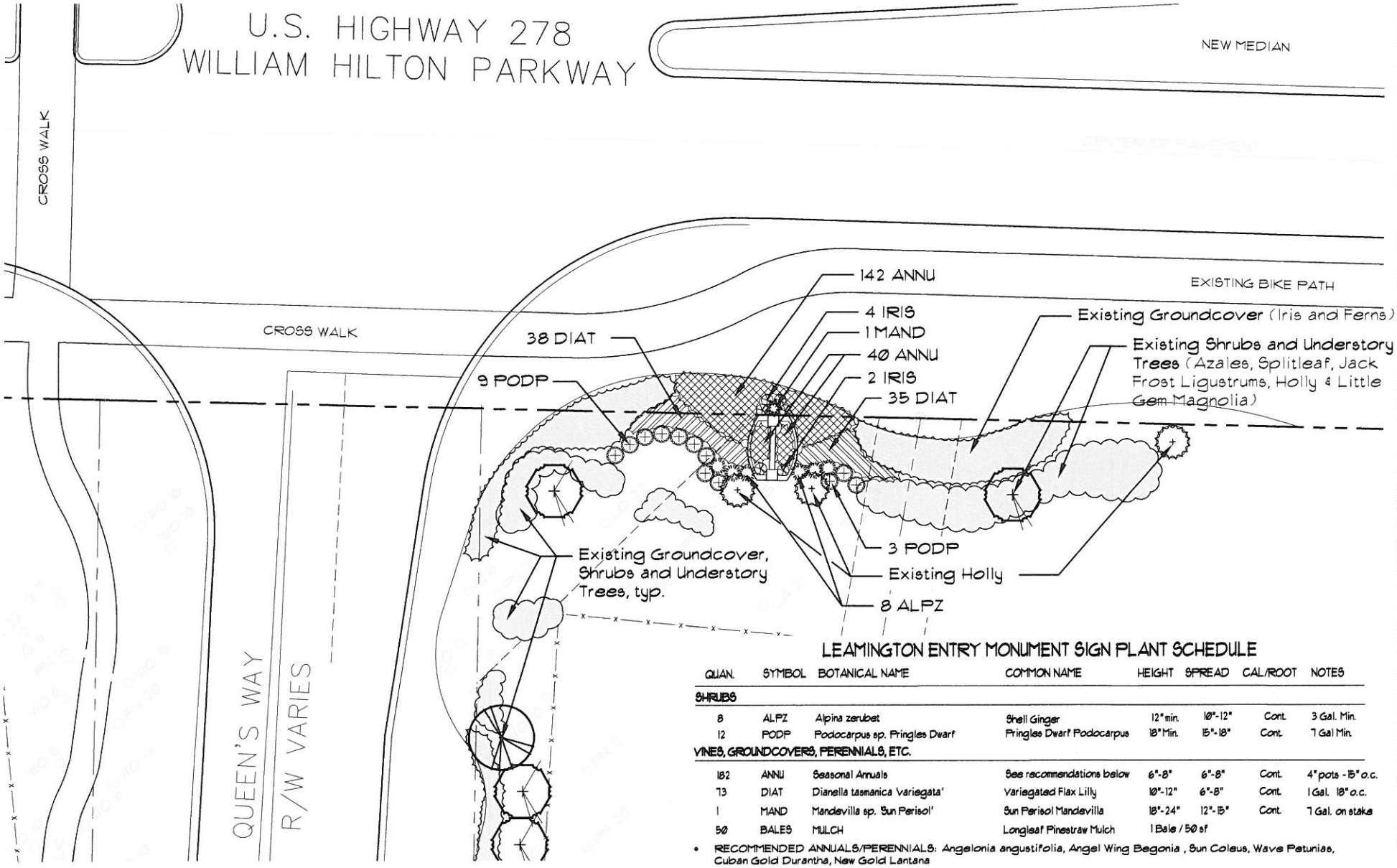

LEAMINGTON ENTRY MONUMENT SIGN PLANT SCHEDULE

QUAN.	SYMBOL	BOTANICAL NAME	COMMON NAME	HEIGHT	SPREAD	CAL/ROOT	NOTES
SHRUBS							
8	ALPZ	Alpina zerubet	Shell Ginger	12" min.	10"-12"	Cont.	3 Gal. Min.
12	PODP	Podocarpus sp. Pringles Dwarf	Pringles Dwarf Podocarpus	18" Min.	15"-18"	Cont.	7 Gal Min.
VINES, GROUNDCOVERS, PERENNIALS, ETC.							
182	ANNU	Seasonal Annuals	See recommendations below	6"-8"	6"-8"	Cont.	4" pots - 15" o.c.
73	DIAT	Dianella tasmanica 'Variegata'	Variegated Flax Lilly	10"-12"	6"-8"	Cont.	1 Gal. 18" o.c.
1	MAND	Mandevilla sp. 'Sun Perisol'	Sun Perisol Mandevilla	18"-24"	12"-15"	Cont.	7 Gal. on stake
50	BALES	MULCH	Longleaf Pinestraw Mulch	1 Bale / 50 sf			

- RECOMMENDED ANNUALS/PERENNIALS: Angelonia angustifolia, Angel Wing Begonia , Sun Coleus, Wave Petunias, Cuban Gold Duranta, New Gold Lantana

DESIGN TEAM/DRB COMMENT SHEET

The comments below are staff recommendations to the Design Review Board (DRB) and do NOT constitute DRB approval or denial.

PROJECT NAME: Leamington Entrance Sign - SIGN DRB#: DRB-000543-2014

DATE:May 13, 2014

RECOMMENDATION: Approval ☐ Approval with Conditions ☒ Denial ☐

The Leamington entrance sign was removed in conjunction with the Town's project at Queen's Way and US 278. The applicant proposes to construct a monument sign of brick and stucco with colors/materials to match existing Leamington projects. The proposed sign is significantly larger than the previous sign and out of scale with the location. Staff recommends reducing the size of the sign.